THE ARMDROID 1 ROBOTIC ARM

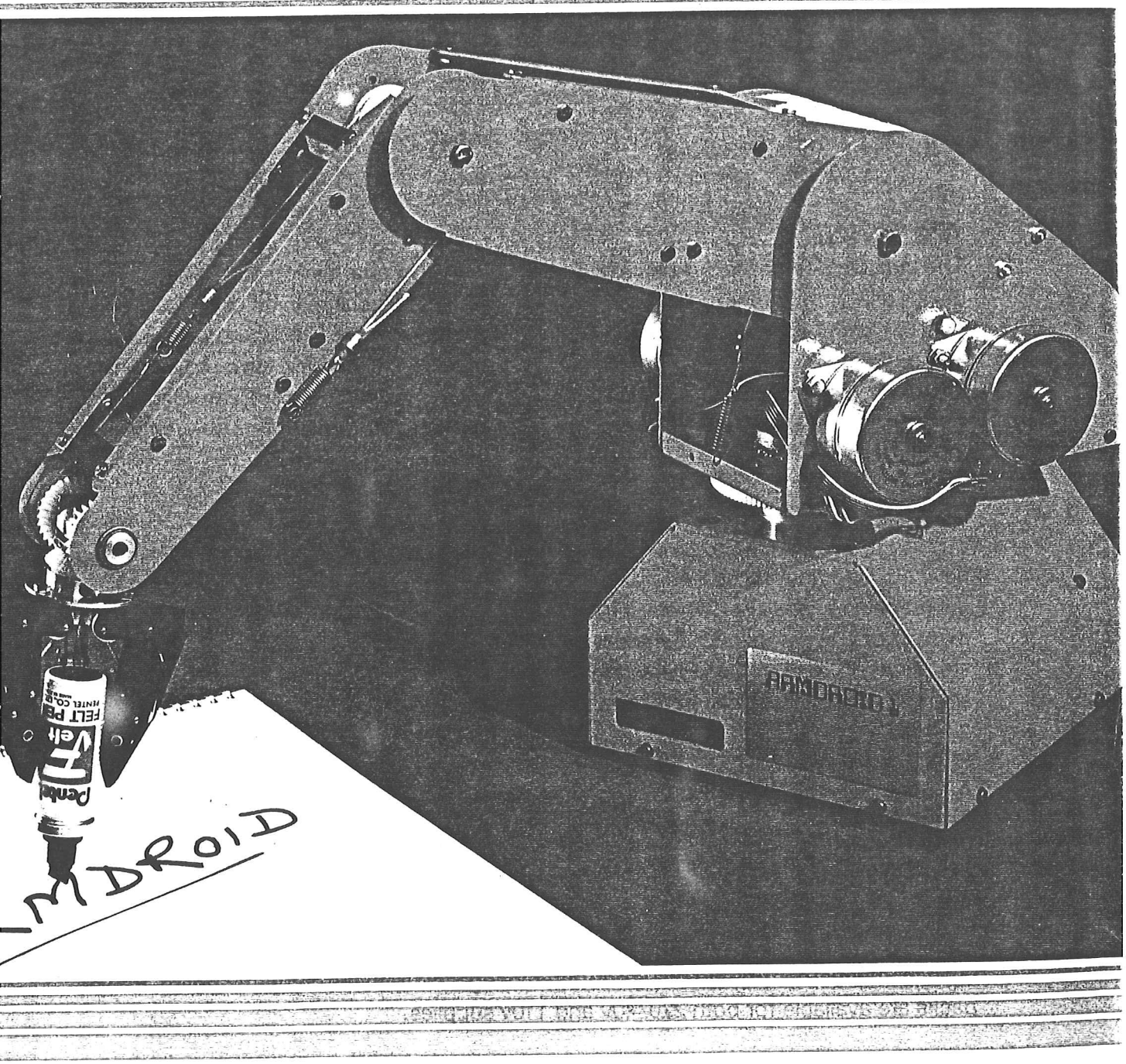

COLNE ROBOTICS CO. LTD.

BEAUFORT ROAD, off RICHMOND ROAD, TWICKENHAM TW1 2PQ, ENGLAND

Telephone: 01-892 8197/8241

Telex: 8814066

SPECIFICATIONS

Configuration	5 Axes of rotation
Gripper	3 Finger type
Drive	6 Stepper motors with open loop control
Controller	Any micro computer with an 8 bit parallel port
Power Requirement	15 volts 5 to 6 amps
Weight	3.5 Kg. without power pack
Size	150mm x 230mm x 310mm high

PERFORMANCE

Resolution	4mm
Load Capacity	300gms
Gripping Force	20 Newtons
Reach	430mm

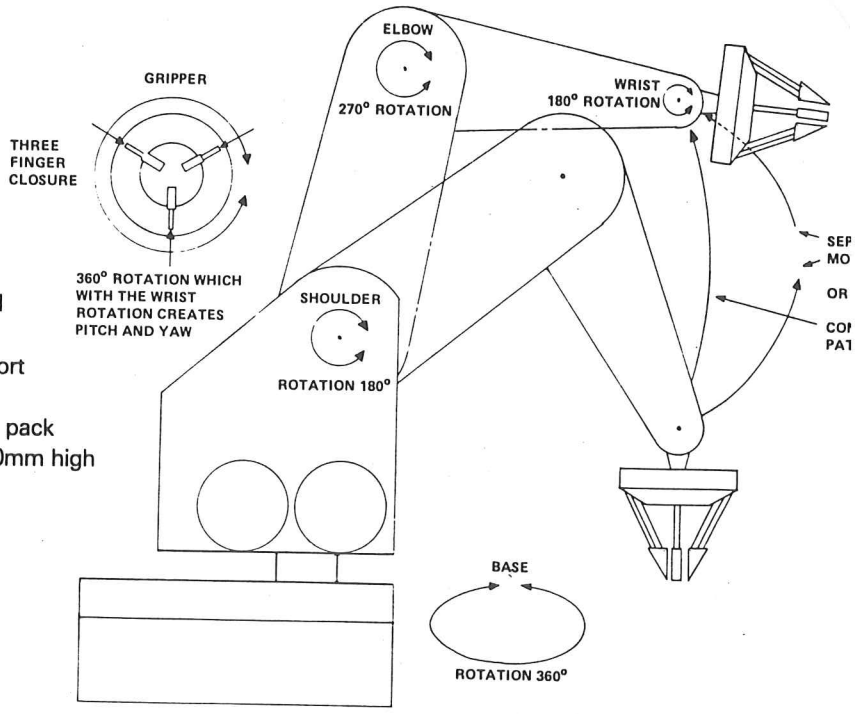

THE DEVICE

The *Armdroid* represents an important step forward in automation and handling. The device has five axes of rotation and is a continuous path machine. In other words it is able to use several joints at once and to perform a programmed move sequence under computer control. The robot comes either as a kit or in assembled form. This low cost robotic development tool can be used in the home, school, factory or research laboratory as an educational device. It is available with two distinct modes of control – computer control or manual control.

COMPUTER CONTROL AND SOFTWARE

The *Armdroid* can be driven by most micro computers and can be used as a handling device or alternatively as a computer peripheral. All the well known names will operate the machine such as Pet, Apple, TRS 80, ZX 81, RML 380Z, Acorn, BBC Computer and many more. We now have software available for many of these computers. Programs are memory orientated and have a learning capability so that a robot is able to repeat a sequence which has been taught to it as many times as required.

MANUAL CONTROL

A hand held control box using separate centre-off switches to operate each of the six motors is available to special order.

THE ELECTRONICS

The computer controlled robot has an interface board for an 8 bit bi-directional parallel port. Micro switches to aid position sensing are optional. A separate interface board is used for manual control and this is now interchangeable with the computer board. Power packs are available for both 220/40v and 110v supplies.

THE HANDBOOK

A set of instructions for both construction and operation is a part of the kit and it contains detailed mechanical drawings, electronics schematics, software listings and description.

ZEAKER INTRODUCTORY PRICE LIST AND ORDER FORM

LNE ROBOTICS CO LTD
AUFORT ROAD
F RICHMOND ROAD
ST TWICKENHAM
DDX TW1 2PH

LEPHONE 892 8197 or 8241 TELEX 8814066

ME .....

SITION .....

DRESS .....

.....

.....

GANISATION .....

ONE .....

EM	DESCRIPTION		PRICE EACH	QTY	TOTAL PRICE
	Zeaker Mobile Robot, Control Station and connecting leads between control station, Robot and Micro Computer. Manual	In Kit Form	£ 52.00		
		Ready Assembled	69.50		
	Software listing for your Micro - See Appendix for Catalogue No	Catalogue Number	Free Of Charge		
	Interface for ZX81 Computer		13.00		
	Interface for Spectrum Computer		25.00		
	Cassette of Software for your Micro - See Appendix for Catalogue No	Catalogue Number	6.00		
			SUB TOTAL		
		Plus Packing, Postage, and Insurance			3.00
			SUB TOTAL		
			ADD 15% VAT		
			TOTAL AMOUNT		

ess otherwise arranged
ment is due before delivery
cept for Educational,
titutional and Large Commercial
chasers where payment is due after
ivery)

IL 1983

SPECIFICATIONS

Configuration	5 Axes of rotation
Gripper	3 Finger type
Drive	6 Stepper motors with open loop control
Controller	Any micro computer with an 8 bit parallel port
Power Requirement	15 volts 5 to 6 amps
Weight	3.5 Kg. without power pack
Size	150mm x 230mm x 310mm high

PERFORMANCE

Resolution	4mm
Load Capacity	300gms
Gripping Force	20 Newtons
Reach	430mm

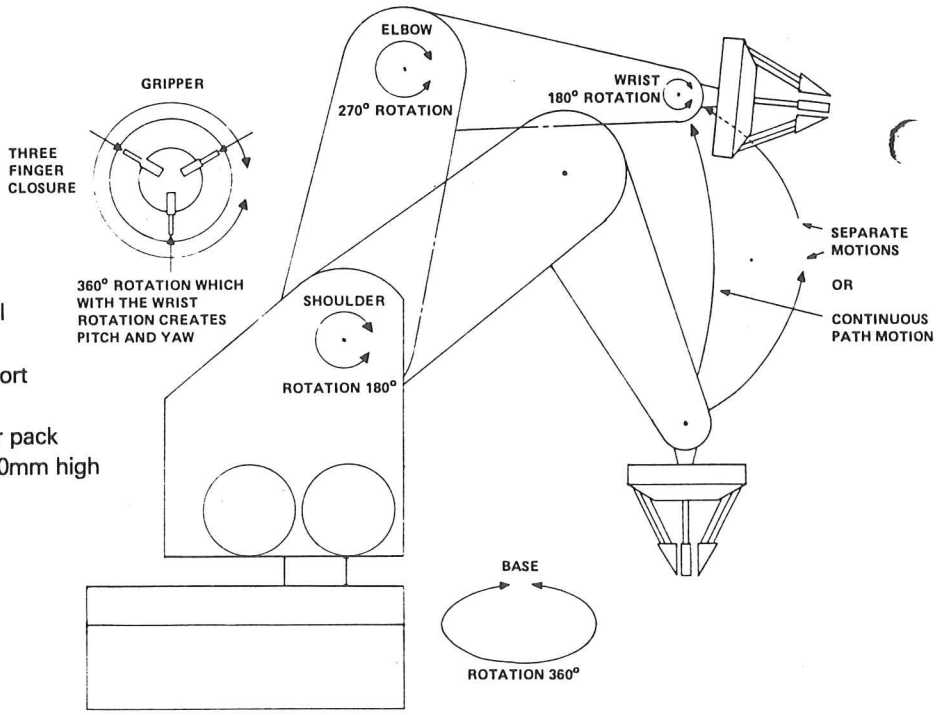

THE DEVICE

The *Armdroid* represents an important step forward in automation and handling. The device has five axes of rotation and is a continuous path machine. In other words it is able to use several joints at once and to perform a programmed move sequence under computer control. The robot comes either as a kit or in assembled form. This low cost robotic development tool can be used in the home, school, factory or research laboratory as an educational device. It is available with two distinct modes of control – computer control or manual control.

COMPUTER CONTROL AND SOFTWARE

The *Armdroid* can be driven by most micro computers and can be used as a handling device or alternatively as a computer peripheral. All the well known names will operate the machine such as Pet, Apple, TRS 80, ZX 81, RML 380Z, Acorn, BBC Computer and many more. We now have software available for many of these computers. Programs are memory orientated and have a learning capability so that a robot is able to repeat a sequence which has been taught to it as many times as required.

MANUAL CONTROL

A hand held control box using separate centre-off switches to operate each of the six motors is available to special order.

THE ELECTRONICS

The computer controlled robot has an interface board for an 8 bit bi-directional parallel port. Micro switches to aid position sensing are optional. A separate interface board is used for manual control and this is now interchangeable with the computer board. Power packs are available for both 220/40v and 110v supplies.

THE HANDBOOK

A set of instructions for both construction and operation is a part of the kit and it contains detailed mechanical drawings, electronics schematics, software listings and description.

COLNE ROBOTICS CO. LTD.

BEAUFORT ROAD, off RICHMOND ROAD, TWICKENHAM TW1 2PQ, ENGLAND

Telephone: 01-892 8197/8241

Telex: 8814066

THE ZEAKER MICRO-TURTLE

The world's first low-cost mobile robot for micro-computers.

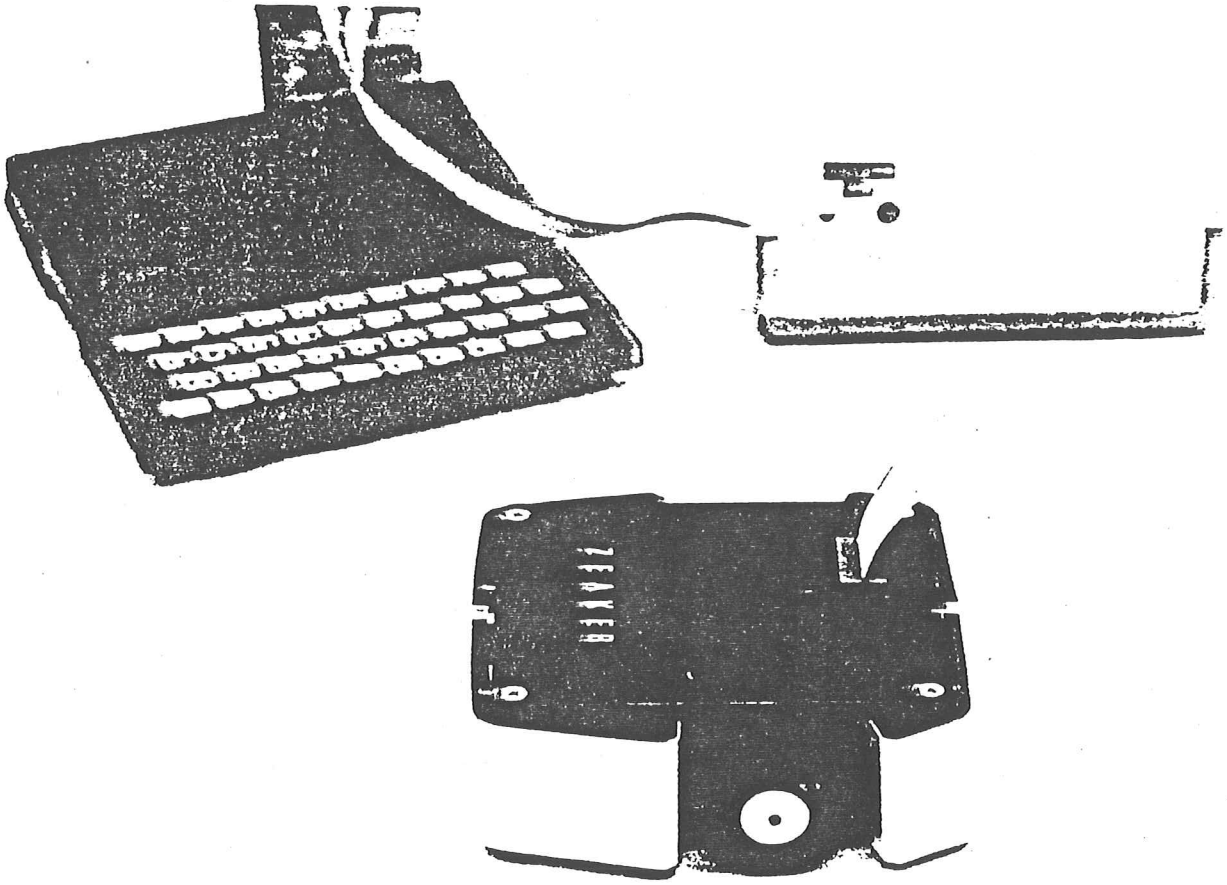

WHAT IS IT? Zeaker is a small mobile robot (5" x 5" x 2") with two DC motor drive, four touch sensors, a two-tone horn, direction-indicating LED's, a power supply, 2m umbilical ribbon cable, manual and software.

WHAT DOES IT DO? The Zeaker can be driven from any micro-computer which has an 8 bit bi-directional port (in the case of ZX81 a special interface board is required - see below). Software provides a learning program, contrc of pen and response of Zeaker to contact with its ser

---

I am interested in purchasing the units indicated below, I understand yc will inform me when they are ready for despatch and will then ask me tc forward cheque/PO in payment.

___ Kit @ £59.00 (incl VAT)

___ Assembled Unit @ £79.00 (incl VAT)

___ ZX81 Interface Board @ £15.00 (incl VAT)

Please tear off and send to above address.

THE ZEAKER MICRO-MOBILE — a low cost mobile robot for micro-computers

A new product shortly to become available from Colne Robotics will be a 2-wheeled mobile robot known as the Zeaker Micro-Mobile. Its movements can be controlled by a micro-computer, via a connecting umbilical ribbon cable. Software is provided which permits the movements to be memorized and reproduced — that is to say Zeaker has a learning capability. With further appropriate software it is capable of drawing Turtle and Logo graphics.

Sensors indicate when the robot touches an obstacle and the computer instructs it to find an alternative path. Stimulation of the sensors produces one of two notes on a horn, according to the direction of Zeaker's movements.

An additional feature is the built-in, retractable pen beneath the unit, which can trace the path taken across a surface. The pen itself is controlled by the computer, and its position (lowered or retracted) is indicated by a light on the top of the robot. Two further lights change according to the direction of movement.

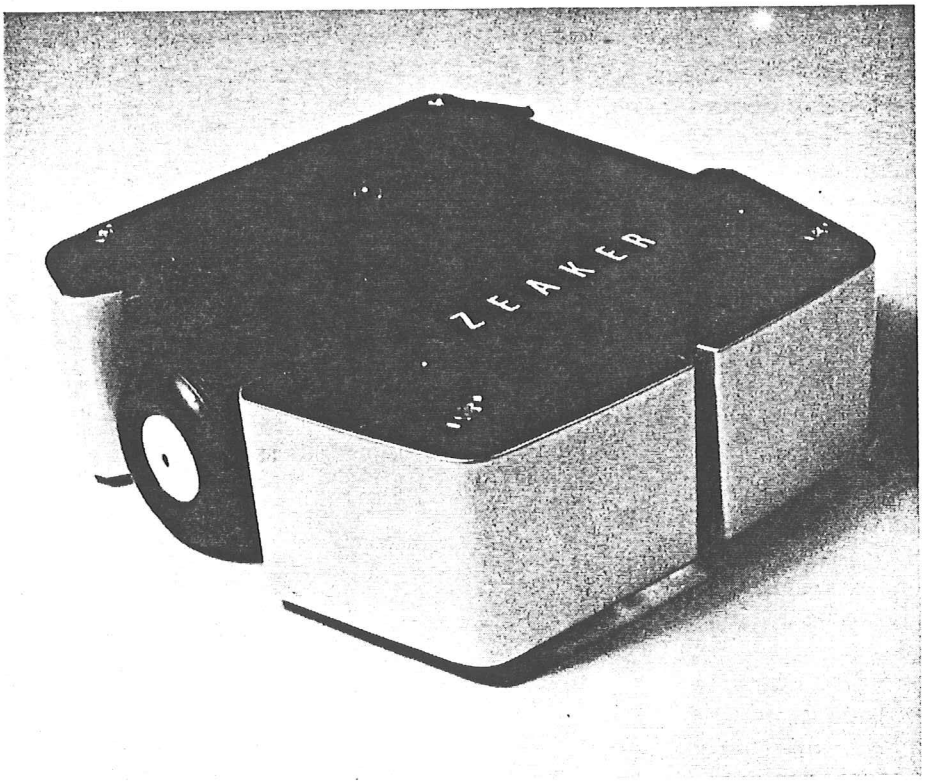

The Zeaker Micro-Mobile is aimed at the educational market, in which a growing number of schools wish to extend their computer teaching syllabus to cover control systems, through the use of micro-computers. It is also aimed at the rapidly expanding computer hobby market. To keep in line with the fall in micro-computer prices, the units have been produced at very low cost: £59.95 for the kit version and £79.95 for the assembled robot. (INTRODUCTORY OFFER).

Zeaker comes complete with interface, power supply, operation manual and software. It can be driven by any micro-computer which has an 8-bit bi-directional port, as well as by the ZX81 for which a special interface is available from Colne Robotics. We plan to produce interfaces for other popular micro-computers too.

Look out for Zeaker on the front cover of the May '83 issue of "Practical Electronics", available from 8th April.

THE ARMDROID 1 ROBOTIC ARM

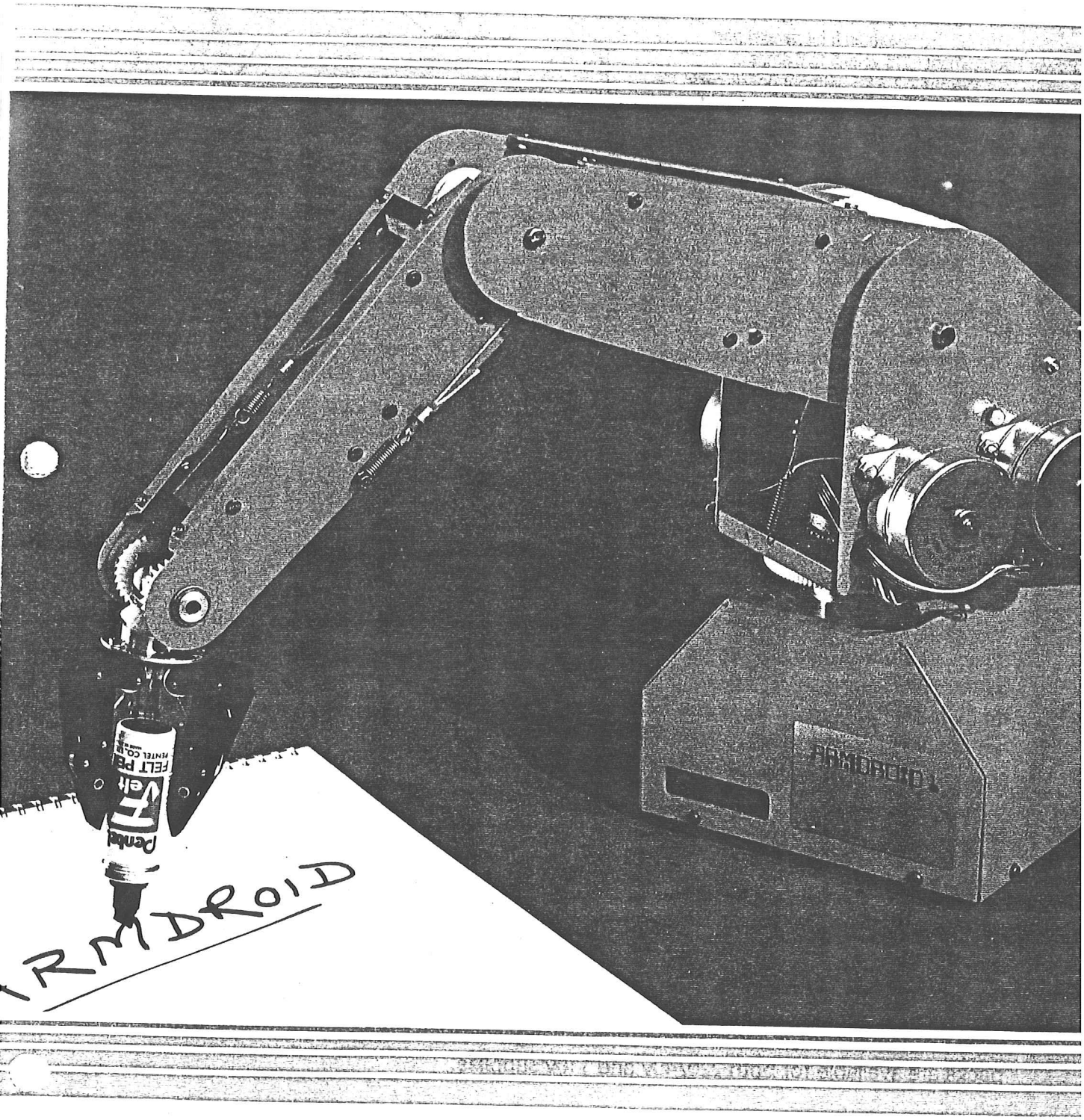

COLNE ROBOTICS CO. LTD.

BEAUFORT ROAD, off RICHMOND ROAD, TWICKENHAM TW1 2PQ, ENGLAND

Telephone: 01-892 8197/8241

Telex: 8814066

Patch into 5681

JP EPATCH

```
EPATCH  ADD  HL, HL     Double count
        PUSH HL         Save it
        ADD  HL, HL     Count x 4
        POP  BC         restore count x 2
        ADD  HL, BC     Count x 6
        LD   BC, ARST   Get buffer pointer
        ADD  HL, BC     Get new CUROW pointer
        LD   (CUROW), HL Save it
        JP   QUES1
```

This patch is designed to over come the logic error that row edit does not modify CUROW, the pointer to next available row

Investigate where FTABL is accessed and determine the feasibility of choosing ALL or HALF stepping

```
1030 CN=1
1000 RC=2.82808
1010 EL= PEEK(ZH        )*RC ;' POSAR + 3  ELBOW
1020 SH = PEEK(ZH        )*RC ;' POSA + 5  SHOULDER.
1100 GOSUB 1400 ; BC=BB  ;' CALCULATE BC
1110 EL= EL+1
1120 GOSUB 1400
1130 IF ABS(BC-BB)< 1 THEN 1230
1135 IF CN > 4 THEN 1230
1140 IF BC-BB < 0 THEN 1190
1150 SH= SH+1 ; CN= CN+1
1160 GOSUB 1400
1170 IF ABS(BC-BB)< 1 THEN 1230
1180 GO TO 1135
1190 SH= SH-1 ; CN=CN+1
1200 GOSUB 1400
1210 IF ABS(BC-BB)<1 THEN 1230
1220 GO TO 1135
1230 RETURN


1400 H= 380 * SIN(EL/2)
1410 BB= SIN(4.71239 - (SH + 0.785398 - EL/2))*H
1420 RETURN
```

40A4 Start of Basic. 6B00

```
690 AR=%9000
700 CN=1
710 EL=PEEKW(%521B)*2.82808
720 SH=PEEKW(%521D)*2.82808
730 INPUT"HOW MANY STEPS";N
740 FOR I=1 TO N
750 GOSUB 1100
760 NEXT I
780 MERGE %CD,%578D
790 DELETE 5000 / 500 SYSTEM 690
1100 GOSUB 1400
1110 BC=BB
1120 EL=EL+1
1130 GOSUB 1400
1140 IF ABS(BC-BB)<1 THEN 1280
1150 IF CN>4 THEN
1160 IF BC-BB<0 THEN 1220
1170 SH=SH+1
1180 CN=CN+1
1190 GOSUB 1400
1200 IF ABS(BC-BB)<1 THEN 1280
1210 GO TO 1150
1220 SH=SH-1
1230 CN=CN+1
1250 GOSUB 1400
1260 IF ABS(BC-BB)<1 THEN 1280
1270 GO TO 1150
1280 POKEW AR+4,EL
1290 POKEW AR+5,SH
1300 AR=AR+6
1310 RETURN

1400 H=380*SIN(EL/2)
1410 BB=SIN(4.71239-(SH+0.785398-EL/2))*H
1420 RETURN
```

```
100  GOSUB 530
110  OPEN "I", 1, FL$
120  I=1
130  LINEINPUT#1, A$
140  FOR I= 1 TO 36
150  AA$= MID$(A$, I, 1)
160  POKE %5214+I, VAL(AA$)
170  NEXT I
180  AA$= RIGHT$(A$, 1)
190  CN = VAL(A$)
200  POKEW %5205, CN
210  I=1
220  LINEINPUT #1, A$
230  IF EOF(1) THEN 280
240  FOR J=1 TO LEN(A$)
250  AA$= MID$(A$,J, 1)
260  POKE %8FFF+I, VAL(AA$)
270  I=I+1
280  NEXT J
290  CLOSE 1
300  MERGE %C3, %5597
310  GOSUB 530   ' A$ = ""
320  OPEN "O", 1, FL$
330  CN= PEEKW(%5205)
340  FOR I=1 TO 36
350  AA$ = CHR$(PEEK(%5214+I))
360  A$= A$ + AA$
370  IF LEN(A$) <= 253 THEN RETURN
380  PRINT #1, A$;
390  A$= ""
400  GO TO
```

```
360 NEXT I
370 A$=A$+CHR$(CN)
380 PRINT #1, A$;
390 FOR I=1 TO CN
400 FOR J=0 TO 5
410 IJ=(I-1)*6+J
420
390 A$=""
400 FOR I=1 TO CN
410 FOR J=0 TO 5
420 IJ=(I-1)*6+J
430 AA$=PEEK(&9000+IJ)
440 A$=A$+AA$
450 IF LEN(A$)<253 THEN 480
460 PRINT #1, A$;
470 A$=""
480 NEXT J
490 NEXT I
500 PRINT
500 IF A$<>"" THEN PRINT #1, A$;
520 NEXT A
510 CLOSE 1
520 MERGE &C3, &5597
530 INPUT "Enter file name (without extension)";FL$
540 IF FL$="" THEN 530
550 INPUT "Which drive number";DN$
560 IF DN$<"0" OR DN$>"3" THEN 550
570 FL$=FL$+"/ARM:"+DN$
580 RETURN
```

MERGE CP Ø ~~SET 7,A~~

~~CALL NZ, 4409H~~

PUSH AF ← SET 7,A

CALL NZ, 4409

POP AF ← RES 7,A

JP NZ, 5597

%CB,%FF %CB,%BF

%FE, Ø, %FS, %C4, %4409, %F1, %C2, %5597

When using modules which are Compiled using ZBASIC ZXCDM48

Amendments to LEARN/CMD

RDWRT EQU (xxxx) Address of FCC entry to k

(1) 556EH CDC901 CALL CLRSC (delete this)

replace with CALL RDWRT

56E5H 21E753 LD HL, CASRD (delete this)

replace with C3 xxxx JP (Read entry

5740H ED4B0552 LD BC,(COUNT) (delete this

replace with C3 xxxx JP (Write entry)

or Delete 56E5H to 5808H and add the following equates

READ EQU xxxx (Entry to READ)

WRITE EQU xxxx (Entry to Write)

Move 5374H – 5394H up to 536B and fill with 20H

(2)

Amendments to READWRIT/CMD

Look at 1st 3 bytes – JP ⇒ secondary entry

At secondary entry module

Replace rel bytes 11 – 13 with

CALL CLSCRN CDC901

and bytes 14–16 with 00 00 00

At relative byte 33 is a JP xxxx

replace this with JP 5571H (i.e. back to LEA

Look for proprietary notice (just before string storag

which starts with 1CH, 1FH and ends with

70H, 79H, 0D (72 bytes in all) and replace wi

00's

(3) Look for unused text at end. Seems to star

with a redundant C9H and then has 20 asterisks

(24H)

Similar amendments will be required to other modules which should be added to READWRIT

L(earn)

exit by pressing Ø (.?)

S(tart) – new sequence.
C(ontinue) – from current position

After S or C move arm to start point.
When satisfied press space bar. (arm locks up)

D(isplay)

Scrolling halted by pressing Ø
To continue press any other key.
To step scroll keep pressing Ø

E(dit)

R(ow count) truncates sequence then <ENTER>
then number of last row to be performed then <ENTER>

M(otor step) allows changes to any row or column

S(et Arm)

Sets current position of arm as new start point

During L(earn) sets a point to which the arm must go before executing another sequence.

W(rite) writes sequence to tape.

R(eau) reads sequence from tape.

C(heck) verifies tape sequence.

G(o) moves the arm through sequence.

T(o Start) takes arm back to start position.

F(ree) removes motor torque allowing movement by hand.

M(anual) allows control of movement by pressing keys.

Motor.	Forward	Reverse.
Gripper	1	Q
Wrist left	2	W
Wrist right	3	E
Forearm	4	R
Shoulder	5	T
Base	6	Y

B(oot) clears sequence & restarts program.

Q(uit) returns to DOS.

Colne Robotics Armdroid

The Small-Systems Robot

Steven W. Leininger
5402 Summit Ridge Trail
Arlington, TX 76017

If you think you've explored all the possible hardware options for your small-computer system and are looking for some excitement, you might be interested in Armdroid, a new computer-controlled robot arm. The bright orange mechanical arm is available from Colne Robotics in kit or assembled form, complete with power supply and interface electronics. The kit form, besides being less expensive, "enables the person assembling the device to understand the principles of the robot," according to the manufacturer. The robot can be used for a variety of experimental and educational applications. It has 6 degrees of motion and a lift capacity of 10 ounces. I received both a kit and an assembled Armdroid for my evaluation, along with a "preliminary" manual.

Mechanical Description

The Armdroid has five major mechanical components: the base, the shoulder, the upper arm, the forearm, and the wrist and hand assembly. Each section is connected to its neighbor by a pivoting or rotating joint. The stationary base sits on the tabletop and provides support for the rest of the arm. The base, which also serves as the enclosure for the stepper-motor-drive electronics, contains the motor which rotates the arm about a vertical axis through the base.

About the Author

Steven W. Leininger was the design engineer for the original Radio Shack TRS-80 Model I microcomputer. He is now an independent computer consultant.

At a Glance

Name
Armdroid

Use
Robotic arm

Manufacturer
Colne Robotics
207 NE 33rd St.
Fort Lauderdale, FL 33334

Dimensions
At shoulder: 18 by 18 by 29 cm (7 by 7 by 11.5 in)
Shoulder pivot height: 25 cm (10 in)
Arm length at maximum extension from shoulder pivot to finger tip: 48 cm (19 in)

Price
Kit: $595
Assembled: $695

Features
6 degrees of motion; menu-driven control software; 10-ounce load capacity

Additional Hardware Needed
TRS-80 Model I Level II (other microcomputers will be supported in the future)

Additional Software Needed
Learn, an interactive menu-driven control program (included)

Hardware Option
Zero-position sense switches

Documentation
Construction and Operation Manual, 87 pages

Audience
Experimenters, students, and professionals interested in robotics

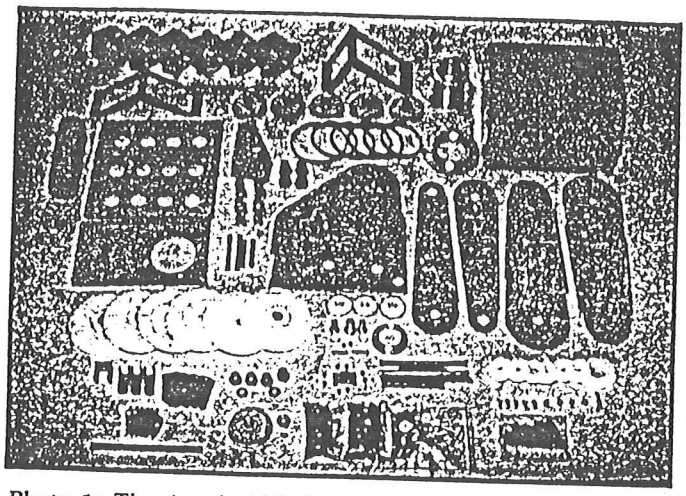

Photo 1: *The Armdroid kit's many parts. The cost of the six stepper motors (at the top of the photo) is offset by the relatively inexpensive stamped-steel chassis and structural parts. The power supply and interface electronics are not shown.*

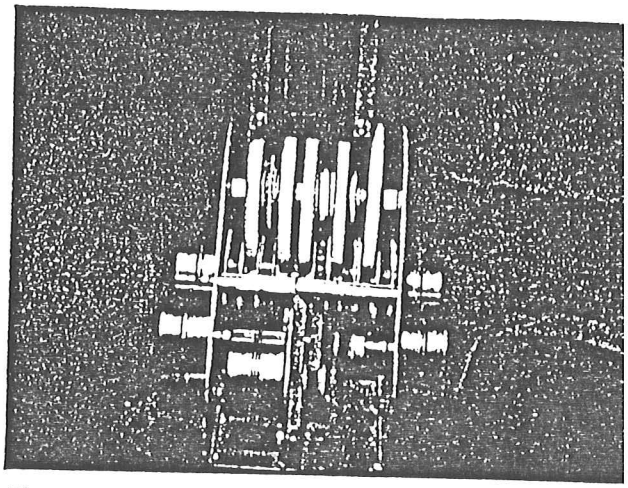

Photo 2: *The shoulder contains five of the six stepper mot Reduction gears are used to increase the force applied via drive cables.*

The shoulder rotates on the main bearing, a fairly heavy-duty ball-bearing assembly at the top of the base. Five stepper motors and associated reduction gears and drive belts are mounted on the shoulder and provide motion control to the arm, wrist, and hand.

The upper arm connects to the shoulder with a horizontal pivot and is rotated on that pivot by one of the stepper motors in the shoulder. If you move the upper arm vertically, the hand is raised and brought closer to the base. Cable-driving gears transmit motion to the forearm and the hand and wrist assembly; these are mounted in the shoulder end of the upper arm.

The forearm fastens to the upper arm with a horizontal pivot and is rotated about that point with one of the motors in the shoulder. The primary response to pivoting the forearm is the raising or lowering of the hand with respect to the tabletop.

The hand and wrist assembly attaches to the end of the forearm with a combination horizontal pivot and bevel gear assembly. The operator uses two motors in the shoulder to either rotate the hand about the pivot (an up-and-down motion) or twist the hand about its axis. The remaining motor in the shoulder opens and closes the hand's three rubber-tipped metal fingers.

You can move any section independently without affecting the orientation of the other sections because of the Armdroid's parallelogram-type construction. This independence of control permits the angle of the hand to remain constant with respect to the workbench while the rest of the arm is manipulated to position the hand in the desired location.

Interface Electronics

The Armdroid I tested came with an I/O (input/output) adapter for the Radio Shack TRS-80 Model I. This adapter, a nonlatched parallel port, plugs into the expansion port on the TRS-80. A cable from the adapter plu into the base of the Armdroid.

Colne Robotics has mounted two printed-circuit car within the base of the Armdroid: the interface board a the motor-drive board. The interface board accep signals from the TRS-80, conditions them, and conve them to pulses of the duration and shape suitable for co trolling the arm's motors. The motor-drive boa amplifies the signals to provide the voltage and curre levels required to drive the motors' coils.

You can set the Armdroid's internal electronics for e ternal computer control or operation via manual switch by making the selection on the two printed-circuit boar inside the Armdroid's base.

Building the Kit

Being a disciple of Erector Set and Heathkit, I had n fears about venturing out into the frontiers of robot k building. To get a feel for the scope of the project, I lai all the parts out and familiarized myself with the cor struction section of the manual.

The manual I received was a preliminary version. Th entire mechanical assembly instructions were on just si pages! Undaunted, I forged ahead. About halfwa through the first paragraph, I was instructed to glu magnets onto some of the gears. Apparently, the magnet are optional (at least they weren't included in the kit), bu no mention was made of that fact. The system uses th magnets and their respective reed switches to sense th home position of the gears.

The instructions rambled on, sometimes with severa steps in a sentence. The manual specified part number (usually) but didn't refer to the drawing numbers.

I knew the next part was going to be tricky because the instructions said that an assistant would be helpful. The task at hand was to assemble a dual-race ball-bearing assembly from scratch. Using refrigerated petroleum jelly

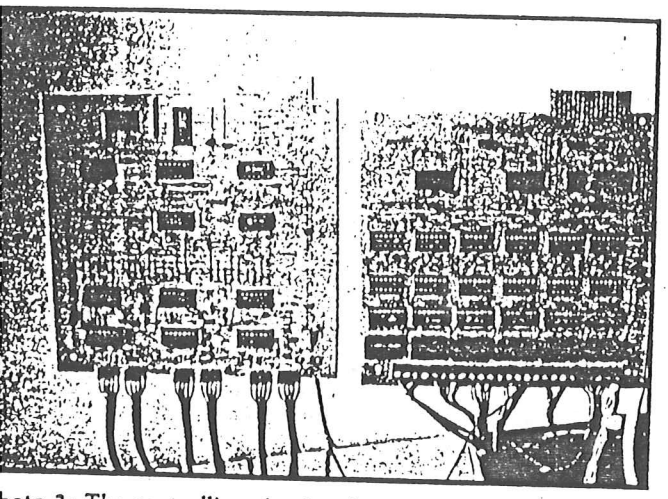

hoto 3: *The controlling circuitry is contained on two printed-rcuit boards. The motor-drive board (left) and the micro-rocessor interface board (right) are easy to assemble and con-ect directly to a TRS-80 Model I (versions for the Commodore ET, the Apple II, and the Sinclair ZX81 are planned).*

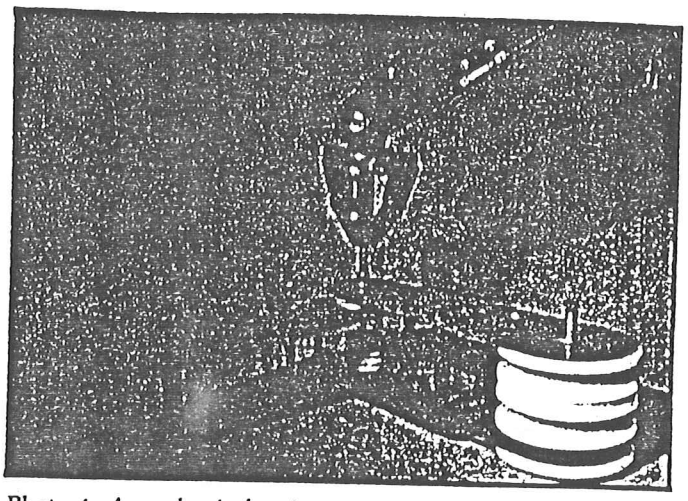

Photo 4: *A mechanical assistant can speed the assembly of the arm.*

per the instructions, I greased the bearing track and nbedded 24 ball bearings in the goo. After carefully in-rting the base-support column into the bearing and rning the assembly upright, I attempted to repeat the b on the upper bearing track.

Darn. While tightening the adjusting ring, three balls pped out of the lower bearing and huddled in a mound petroleum jelly. Back to the beginning; twice more the me thing happened. Arrgh!! Finally, success! But wait, ny was the shoulder pan rubbing on the shoulder-drive ar? And, wasn't that ball-bearing assembly just a little off parallel? At this point, I decided to cheat and look the factory-assembled Armdroid. It appeared that the aring-support column was too short. I described my oblem to the gentlemen at Colne Robotics over the one and was told that I probably had the bearing g—an almost but not quite symmetrical part—on up-e down.

tried it again: I disassembled the bearing, inverted the ring ring, and carefully placed the steel balls in the roleum-jelly-coated track (I'm pretty good at this by v). Continuing as before, I installed the adjusting ring beheld a smoothly operating shoulder bearing.

he instructions continued: put this motor here, put se gears there, and see the drawing. Well, I looked at drawing. (The drawings are good up to a point, but lack fine detail or close-ups in some areas.) I cheated ouple more times by looking at the assembled arm to fy my understanding of the drawings and text.

ssembly continued on the upper arm and forearm. wrist posed no major problems. Then disaster ck! The fingers are held together with a large number circlips" (split rings that fit around the outside of a t). The circlips allow you to slide a rod through a , then prevent the rod from sliding back again. A ial pair of circlip pliers is an absolute necessity to eed beyond this point. I tried to make do with what I had (needle-nose pliers, screwdrivers, etc.) and realized I definitely needed the proper tools. It would have been nice if the appropriate pliers came in the kit or were at least available as an option.

The final assembly of the hand progressed easily after I purchased the circlip pliers. The instructions said to connect the arm assembly to the shoulder and base assembly. The cable threading came next. In the helpful hints section, the instructions said that this operation is greatly simplified by threading the arm before attaching it to the shoulder. So I started over again.

The actual cable threading progressed well, except for a clearance problem on one of the wrist cables. After checking the preassembled arm, I decided that cable clearance in the wrist is an assembly problem that Colne Robotics had experienced and corrected but had not updated in the manual. Ten minutes later, the offending cable had been restrung and worked smoothly.

The two printed-circuit boards went together just about as well as one would expect. No part numbers or reference designators were silk-screened on the boards, so I had to rely on the drawings in the manual for parts placement. Mounting the interface and motor-driver printed-circuit boards into the base of the Armdroid and connecting the stepper-motor wires to the driver board completed the assembly operation.

Using the Armdroid

A machine-language cassette for the TRS-80 Model I Level II microcomputer comes with the Armdroid. The menu-driven program, named Learn, allows you to familiarize yourself with the operation of the robot arm and to create, modify, and save motion sequences.

The manual suggests reading through the software description quickly and proceeding to the "Introductory Demonstration Sequence" section, which tells you to load Learn and enter the learn mode by typing an "L".

INTRODUCING

PKASO™

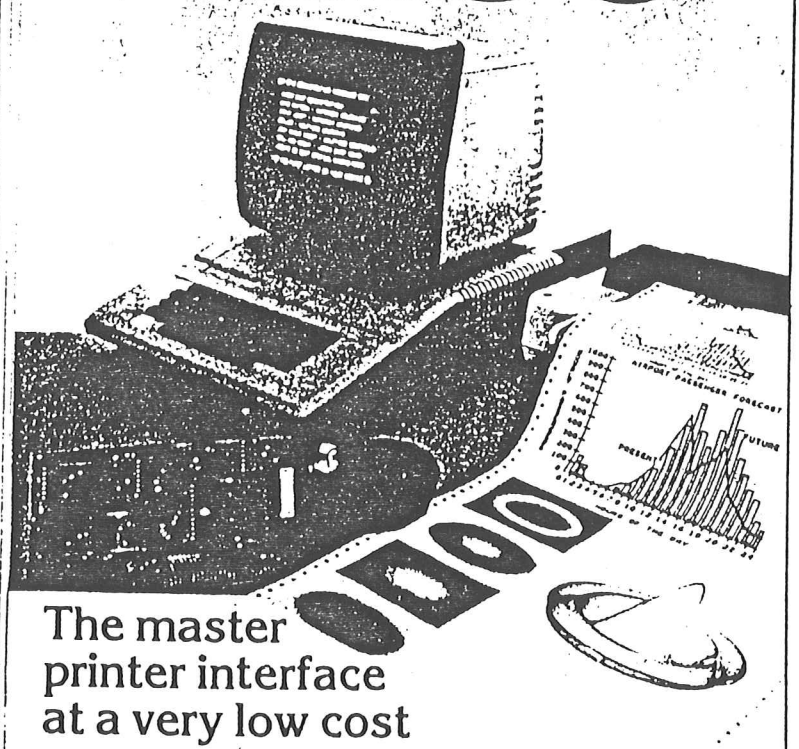

The master printer interface at a very low cost

For the first time ever a truly affordable Apple interface offers all the most sophisticated text and graphics capabilities on Epson®, Okidata®, Centronics®, and IDS® printers. With the easy to use PKASO Interface, you simply slip it into your Apple Computer,® attach the cable to your printer, and enjoy all these features:

• Broadest range of text printing using your software • HiRes graphics with up to 40 creative options • LoRes and HalfTone graphics in 16 levels of gray • SuperRes plotting with up to 2160 x 960 points per page • User created or software defined characters and symbols • Full text and graphics dump of absolutely any screen image.

Gray scale printing

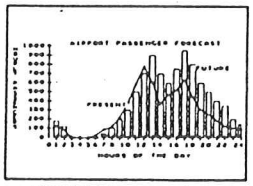

Snapshot screen dump

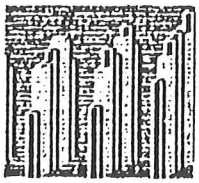

Apple /// compatibility

At Interactive Structures we've built our reputation on innovation, quality and service, and we're doing it again with the new PKASO series. The PKASO Interface will bring out the best in your Apple Computer, your data printer and your program. It will perform with all popular languages such as BASIC and ASSEMBLER. It will print both text and graphics with PASCAL. And it's the first and only Apple interface to offer all this plus support for the Apple Z-80 CP/M System and for full Apple /// operation.

Don't settle for less. And don't pay more. Call us now for the name of the PKASO dealer near you. Circle 210 on inquiry card.

Interactive Structures, Inc.
112 Bala Avenue
P.O. Box 404
Bala Cynwyd, PA 19004
(215) 667-1713

Apple Computer is a registered trade name of Apple Computer Inc
Epson is a registered trade name of Epson America Inc. Okidata is a registered trade name of Okidata Corporation. Centronics is a registered trade name of Centronics Data Computer Corporation
IDS is a registered trade name of Integral Data Systems, Inc.

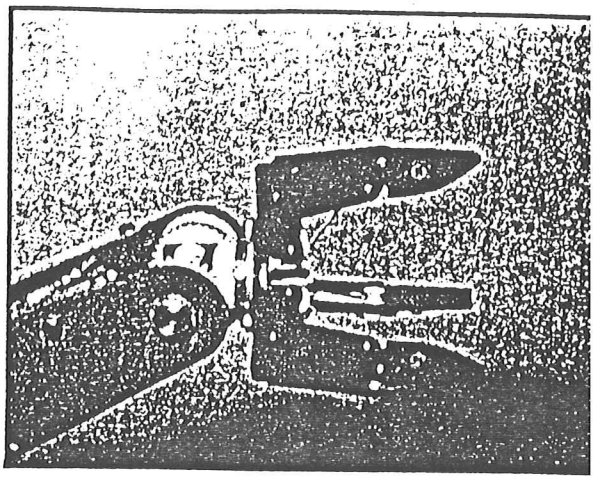

Photo 5: *The hand and wrist assembly has three finge fingers are opened and closed in unison under program c The wrist allows both rotation and up-and-down motior hand.*

This mode lets you manually operate the robot whil gramming it to follow the same motions automatic

The program asks you if you want to start again tinue from the present position, or exit the pro Type "S" to clear the memory and free the arm. Th is free when no torque is applied to the stepper m This allows you to initialize the Armdroid's positi hand using the large gears in the shoulder. When yc satisfied with the starting position, press the space The program applies torque to the arm, effectivel fening and locking the arm in place.

You can now move the arm using the Q, W, E, R, and 1 through 6 keys to manually control the move of the different parts of the arm. If you're like me, i take a couple of tries to predictably move the arm, r the wrist, and open and close the hand under m control. Type a "0" to get out of the learn mode.

Now the miracle of life! Press "G" for go, and the droid takes the shortest path to your initial starting tion. The program then asks "O" (once) or "F" (fore Forever seems like a long time for something you ha tried yet, so type "O".

Wow! The arm is doing just what you taught it t And without the long pauses for head scratching and taking! You are returned to the menu.

To look at the sequence of commands that were se the stepper motors, type "D" for display. A table ap on the screen showing the stepper increment v stored in memory.

To extend the sequence of movements, simply re the learn mode, and type "C" for continue. You can additional motions by using the manual-control Once again, you must type "0" to return to the r mode.

After testing the new sequence, you may decide some of the motions need to be fine tuned. This ca done using the edit mode.

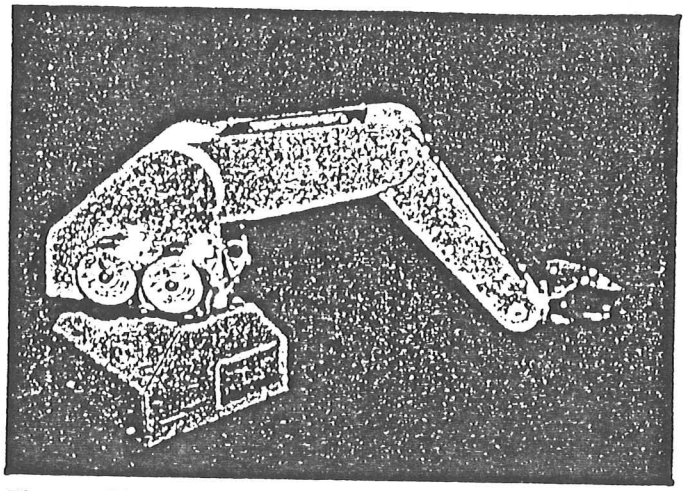

Photo 6: *The Armdroid has a maximum reach of 19 inches from the shoulder base.*

Three cassette-tape commands allow you to save your Armdroid sequence for a rainy day. "W" (write) saves the sequence in memory on the tape, "R" (read) retrieves the sequence from tape, and "C" (check) verifies that the data on the tape is the same as that in memory.

Colne Robotics has graciously included the source listing for the Armdroid control software in the manual. The Z80 assembly-language source is well documented and should prove to be a valuable learning tool for the student of robot technology. The source code is also useful to those who wish to modify the control software for a specific application.

I understand that Colne Robotics is developing similar software for other microcomputers, such as the Commodore PET, the Apple II, and the Sinclair ZX81. Watch their advertisements for further details.

Documentation

The 87-page manual is broken down into four sectio The introduction section is nine pages long and str from the purpose of an experimental robot arm. Disc sions on the economic and social impact of indust robots, complete with tables and formulas, seem m like padding than useful information.

The second section deals with the mechanical assem of the Armdroid. As noted above, some deficiencies a inaccuracies in the instructions exist. A hand-holdi step-by-step approach would benefit the novice build

The next section details the electronics of the Ar droid. This section was not too bad, but again a step-b step approach would be helpful.

The final section describes the software package cluded with the arm. This chapter of the manual was t easiest to use, due in part to the quality of the Learn p gram itself. And I applaud the inclusion of the progr listing as an aid to understanding the ins and outs microprocessor-controlled robotics.

It should be noted that my review is based on a "p liminary" manual for the Armdroid. I have been re sured that the manual will be revised to eliminate some the limitations that I have noted above.

Conclusions

- The Armdroid is a low-cost manipulator with go dexterity and maneuverability.
- The software delivered with the arm is easy to use a serves as a powerful tool in understanding robot oper tion.
- The Armdroid kit is not for the inexperienced builde unless the manual is improved.
- I feel I have learned a lot about the mechanics, ele tronics, and software of robots, thanks to the people Colne Robotics. ■

Apple Logo

by Harold Abelson

The name Logo describes not only the evolving family of computer languages detailed in this book, but also a philosophy of education that makes full and innovative use of the teaching potential of modern computers. *Apple Logo* presents the Apple II user with a complete guide to the applications of this unique system and also includes a description of TI Logo for users of the Texas Instruments 99/4 computer.

The designers' vision of an unlimited educational tool becomes a reality for the Apple II user who begins to work with this procedural language. Logo enables even young children to control the computer in self-directed ways (rather than merely responding to it), yet it also offers sophisticated users a general programming system of considerable power.

Apple Logo actually teaches programming techniques through "Turtle Geometry"—fascinating exercises involving both Logo programming and geometric concepts. Later chapters illustrate more advanced projects such as an "INSTANT" program for preschool children and the famous "DOCTOR" program with its simulated "psychotherapist."

ISBN 0-07-00425-0
240 Pages
Softcover, spiral-bound
$14.95

Call Toll-Free 800/258-5420

BYTE Books 70 Main Street
Peterborough, N.H. 03458

B5

Circle 57 on Inquiry ca

COLNE ROBOTICS

The

Colne Robotics

A R M D R O I D

Construction and Operation Manual

Published by

COLNE ROBOTICS LIMITED
1 Station Road
Twickenham
Middlesex TW1 4LL
(C) Copyright 1981

CONTENTS

		Page No.
1.	Introduction	*1-1*
2.	Mechanics	
2.1	Description	*2-1*
2.2	Technical Hints	*2-2*
2.3	Tools	*2-3*
2.4	Mechanical Parts	*2-4* - *2-8*
2.5	Assembly	*2-9* - *2-14*
3.	Electronics	
3.1	Description	*3-1* - *3-3*
3.2	Component List	*3-3 * - *3-3 *
3.3	Assembly	*3-4* - *3-5*
4.	Software	
4.1	Introduction	*4-1*
4.2	Loading	*4-1*
4.3	General Description	*4-1*
4.4	Command Explanation	*4-1* - *4-4*
4.5	Introductory Demonstration Sequence	*4-5*
4.6	Detailed Software Description	*4-6* - *4-48*
4.7	Applications	*4-48* - *4-58*

INTRODUCTION

The development of Armdroid I arose as a result of a survey of industrial robots. It became apparent that educationalists and hobbyists were starting to show interest in medium and small sized robotic devices. There was however no robot on sale anywhere in the world at a price suitable to these markets. The Armdroid micro-robot now fulfils this role, providing a fascinating new microcomputer peripheral.

Purchase of the robot in kit form enables the assembler to understand its principles and allows for modification, although of course the machine may also be purchased ready assembled.

This manual has been compiled as a guide to the construction and operation of your Armdroid micro-robotic arm, and should be followed carefully. There are separate sections covering both the mechanical and electronic aspects of the robot, as well as the specially written software.

M

E

C

H

A

N

I

C

S.

MECHANICS

2.1 Description

The ARMDROID consists of five main parts.

The base

The base performs not just its obvious function of supporting the rest of the arm. It also houses the printed circuit boards and the motor that provides the rotation.

The Shoulder

The shoulder, which rotates on the base by way of the main bearing, carries five motors and their reduction gears which mesh with the reduction gears on the upper arm.

The Upper Arm

The lower end of the upper arm carries the gears and pulleys that drive the elbow, wrist and hand. It rotates about a horizontal axis on the shoulder.

The Forearm

The forearm rotates about a horizontal axis on the upper arm and carries the wrist bevel gears.

The Wrist and Hand

The two wrist movements, the rotation about the axis of the hand ("twist") and the rotation of the hand about a horizontal axis ("up and down"), depend on a combination of two independant movements. The twist is accomplished by rotating both bevel gears in opposite directions, while the up and down movement is done by turning the gears in the same direction. Combinations of the two movements can be got by turning one bevel gear more than the other.

The three fingered hand with its rubber fingertips has a straightforward open and shut movement.

2.4 ASSEMBLY

Description of item	Part No
Base	01
Base Bearing support column	02
Base motor	03b
Base motor short pulley 20 tooth	04b
Base reduction gear spindle	05
Turned thick wide washer 16mm x 2mm	06
Reduction gear	07
Base belt (medium length) 94 teeth	08m
Base switch support 12mm x 11mm	09
Base switch	10
Shoulder pan	11
Shoulder bearing ring	12
Base gear (large internal dim)	13
Bearing adjusting ring	14
Hand motor support bracket	15
Hand motor	03h
Hand switch bracket	16
Motors - Upper arm	03u
Fore arm	03f
Wrist action	03w
Motor pulleys - Upper arm	04u
Fore arm short 14 tooth	04f
Wrist action long 20 tooth	04w
Hand short 20 tooth	04h

DESCRIPTION OF ITEM	Part No	
Shoulder Side Plates	017	
Switch support bar 107mm x M3 at ends	019	
Support bar spacers M3 clearance X	018/16	
	018/12	
Motor support bracket stiffener 107mm x M3 at ends	019	
Support Bar spacers	018/54	
	018/41	
Reduction gears	020	
Reduction gear spindle 96mm x 6mm	021	
Drive belts long = 114 teeth	08/l	Hand
medium = 94 teeth	08/m	Fore/Upp
short = 87 teeth	08/s	Wrist ac
Upper Arm Drive Gear small internal dim no drum	021	
Upper arm side plates	022	
Upper arm brace	023	
Gears wrist action	024	
hand action	025	
fore arm	026	
Idler pulley	027	
Shoulder pivot 96mm x 8mm spindle	029	
Fore arm side plates	030	
Fore arm brace	031	
Fore arm pulley	032	

DESCRIPTION OF ITEM	Part No.
Elbow Idler pulleys hand wrist	033
Elbow spindle 65mm x 6mm	034
Wrist bevel gear carrier	035
Wrist guide pulleys	036
Wrist bevel gears (flanged)	037
Wrist pivots	038
Hand bevel gear (no flange)	039
Finger support flange	040
Hand pivot	041
Finger tip plates	041
Finger cable clamp	042
Small finger spring	043
Finger tip pivot	044
Middle finger plates	045
Middle finger pivot	046
Large finger spring	047
Finger base	048
Long finger pins 16mm x 3mm	050/l
Short finger pins 13mm x 3mm	050/s
Small finger pulleys	051
Large finger pulleys	052
Large hand sheave pulley	053
Small hand sheave pulley	054
Hand sheave pin	055
Finger tip pads	056
Base pan	057

DESCRIPTION OF ITEM	Part No.
Board Spacers	018/41/54
Spacer bars for boards	058
Rubber feet	059
Cable springs wrist action short	060
Cable springs grip, elbow long	061

PREPARATION AND FIXINGS ETC

DESCRIPTION OF ITEM	Item No.
Magnets	101
Bearing adjustment ring grub screws M4 x 8mm NB + self made plug to protect the fine bearing thread	102
Turned cable clamps 6 x 6mm M3 tapped	103
Cable clamp grub screws M3 x 4 pointed head	104/105
Crimped type cable clamps crimped eyelets	106
Gear Cable grub screws M4 x 6mm flat head	107
Bushers 8mm bore long with flange - shoulder	108
Shoulder pivot spindle spacer	108a
6mm bore short with flange - elbow	109
8mm bore long with flange - wrist	110
8mm bore no flange main gear inserts	111
Gear to sheet metal screws M3 x 6 slot hd CSK	112
Spring pillar and base switch M3 x 10 cheese head	113
Base bearing to shoulder pan M4 x 16 CSK socket head	114

DESCRIPTION ITEM	Item No.
Motor bolts, Base bearing to base M4 x 10 Elbow spindle hex hd	115
Hand to finger, hand to bevel gear M3 x 6 cheese hd	116
Shoulder spindle M5 x 10 hex hd	117
General sheet metal fixing M3 x 6 hex hd	118
M4 Nuts	119
M4 Washers	120
M4 Shakeproofs elbow spindle	121
M5 shakeproofs shoulder spindle	122
M3 Nuts	123
M3 washers - switches	124
6mm steel balls - base bearing	125
Magnetic reed switches	010
Driver board	126
Interface board	127
Edge connector	128
6mm Washers	129
Roll pins	130
4.5mm circlips	131
3mm circlips	132
Elbow spacer	133

2.5 ASSEMBLY

Preparation

Study the parts list, drawings and the parts themselves until you are sure you have identified them all. Assemble the tools suggested in the list of tools (2.3). Read carefully technicla hints section. Solder 12 in o ribbon cable to each motor. Glue magnets (101) into the slots in the reduction gears, noting that the hand gear (25) needs no magnet. Check that the adjusting ring 14 of the main bearing screws easily onto its base. Clean both if necessary. Insert bushes into the arms, if necessary using a vice, but taking care not to distort the sheet metal.

Construction

Fit base bearing support (2) column inside base (1). (M4 bolts, nuts.) NB NUTS INSIDE BASE

Bolt 1 motor (shorter cable) inside base. (M4 hex bolts, washers on motor side - nuts on inside). Fit pulley to spindle base of motor with the grub screw at the top (046). Fit base reduction gear spindle (07) to base. (Thick turned washer, M4 hex bolt) Fit reduction gear and belt. Place a small drop pf oil on the [illegible] reduction gear spindle before fitting reduction gear.

When fitting belts they should be placed fully on the motor spindle and worked gently onto the reduction gear, a small section of their width at a time. (see general hints on lubrication)

Fit base switch support. (M3 hex bolt) NB DRAWING FOR POSITION. Fit base switch and run wires through adjacent hole. (M3 x 10 cheesehead, washer)

Fit bearing ring (12) (long spigot down) through shoulder base pan (11) from inside. The base gear (13) fits on the lower face of the with the magnet at 2o'clock as seen from inside the pan with the flange at the top. (M4 countersunk x 16mm bolts, nuts)

(This step and the next are simpler with some help from an assistant). Put shoulder base pan (gear side up) on to 3in support (books etc,) so that the bearing support column can be inserted. Practise this movement to make sure all is well. Smear vaseline from a fridge, or grease on the bearing track of the flange, and using tweezers to avoid melting the vaseline carefully place 24 bal bearings round the flange, embedding them into grease. There will be a slight gap when all the balls are in place. Invert the base and inser the threaded bearing support column inside the bearing ring taking care not to dislodge any of the balls so that the base pan meshes with the base gear. Keep the two parts level in the same relationship by taping the parts together with a piece of wood a spanner 5mm thick between the motor pulley and the shoulder base pan.

Large rubber bands can be used instead of tape. An assistant to hold the parts for you will be useful here.

Turn the assembly the other way up (the base is now on the bench with the shoulder base pan above it. Put more grease round the bearing track and embed 24 more ball bearings in it. Gently lower the adjusting ring (14) on to the threaded base and then screw the finger tight, remove with tape, adjust the ring until the base pan moves freely without play then tighten the grub screw, inserting a small wood plug to protect the bearing thread. (M4 grub screws)(102). The bearing may need adjusting after some use as it beds in.

Fit hand motor bracket (15) to shoulder base pan (M3 bolts) then the hand motor 03h(M4) and the hand motor pulley. Then fit the hand reed switch bracket (M3) and the switch (M3 x 10 cheesehead bolts).

Fit motors to the shoulder side plates (17) and feed the cables through the holes towards the inside. The bolts which are next to the reduction gears should be placed nut out to prevent the reduction gears catching on the end of the bolts. Fit correct pulleys (04u/f/w) to the motor spindles noting which pulleys from the drawing, tighten the grub screws.

Fit the shoulder plates. This is simplified by loosely tightening the end bolts to support the weight. Feed the motor cables down through the main bearing (M3).

Slide switch support (19) bar through spacers (18), switches (101) and motor support bracket (see drawing for correct order of spacers). You will need to be able to adjust the position of the reed switches after the arm is fitted so that they clear the gear wheels ie tangential to shoulder pivot. Fit the motor support stiffener bar and spacers. Leave nuts finger tight. (M3 nuts).

Assemble reduction gear support bar (21), assemble with the correct length drive belts (08s/m/l) over each gear, reduction gears facing in correct direction and the thin metal M6 washers at either end. (see drawing) Slide gently into position and bolt in the support bolts (M4 a 10mm) Fit the belts round the motor pulleys.

Put upper arm drive gear on the outside of the upper arm side plate. The magnet should be at 1 o'clock, viewed from the gear side of the arm. (M3 CSK screws x 6mm) Fit a brace to one upper arm side piece (22), then fit the other side piece to the brace. Fit all bolts and nuts before tightening any of them. Check 8mm shoulder spindle (29) slides freely through accute bushes in upper arm side pieces and through bores of drive gears, pulleys and spacers. Assemble by sliding shaft from one side and threading gears, pulleys and spacers on in the correct order of orientation - use drawing.

Fit pulley (32) to the outside of the forearm side plate (30) (M3x6mm) (countersunk screws). Fit a brace to one forearm side plate, then fit the other side plate to the brace. Check for squareness before finally tightening bolts.

Put elbow pivot through bushes and an 8mm bar through wrist bushe (M3 bolts, nuts) Check fit before assembly. Assemble the pulley (33) on the elbow spindle (34), lubricate and fit it to the large arm, and bolt through into spindle. (M4 bolts, washers)

Assemble the wrist bevel gear carrier (35) and wrist pulleys (36) and then tap the roll pins gently home with a small hammer, supporting aluminium gear carrier to prevent distortion.

Fit the wrist gears on the bushes (37) from the outside. Fit bevel gear carrier (35) between the wrist bevel gears (37), line up holes in end of wrist pivot (38) bores with tapped hole in carrier by peering down pivots. If you do not have a srcew gripp or magnetic driver use a little piece of masking tape or sellotap to fix M3 cheesehead screw to the end of your screwdriver in such a way that it will pull off after tightening - check gears pivot freely on pivots and that the whole assemble can pivot in oilite bushes (drops of oil on faces of gears and pivots)

Screw the finger support flange (40) to the hand bevel (39). (M3 x 6mm cheesehead screws) Screw the hand pivot (41) to the be gear carrier (35). Tighten on a drop of loctite if available, gently by turning a pair of pliers inside it. The bevel gears sh be positioned with their grub screws pointing towards the hand wh the hand and the forearm are in line (see drawing).

Assemble the fingertip (42) and cable clamp (43) with the small spring (44) on the pivot (45), and clip together with large circlips on the cable clamp. The spring should be positioned so that the "back" of the spring is on the knuckleside of the fingertip, thus tending to open the hand.

Assemble the middle finger (46) and its pivot (47) with the large spring (48). Fix to the finger base (49) with the long pin (50/ (16mm x 3mm) ans two small circlips (see drawing). Fix one circlip to the pin before one begins to assemble.

Join the fingertip to the middle section with the short pin (50/S (13mm x 3mm) and two small circlips.

Cut off one end of the tip spring about 8mm-10mm beyond its hole. Level with its hole bend the spring through a right-angle to secu it. Repeat at the other end. Trim the inner end of the middle finger spring flush with the end of the finger end and treat the outer end as above.

Fit the small pulley (51) to the finger middle section using a short pin (13mm x 3mm) and two small circlips. Fit the larger pulley (52) to the finger base with a long pin (16mm x 3mm) and two small circlips.

Screw the finger base to the finger support flange. Make sure that the fingers are evenly spaced and do not interfere with each other, and then tighten. (M3 x 6mm cheesehead)

Assemble the large and small hand sheave pulleys using the large circlip on hand sheave pin (55).

CABLE THREADING

Slide arm into shoulder, you will need to align the reduction pulleys between the main drive gears as you lower the arm into place, and assemble using M5 hex head bolts and shakeproof washers. Tighten and check the reduction gears "mesh" correctly and the arm moves freely.

Connect grip action cable tail to shoulder base pan via the spring correctly placed over the pulley and tension using the normal meth with the cable clamp.

Glue strips of rubber to finger tips using superglue.

The driver and interface board should be bolted to the base pan using the spacer bars (58) and spacers. Bolt base pan (57) to base (M3 x 6mm hex head).

Hints: Useful tools are:

a) 2 or 3 'bulldog clips' to maintain the tension in the cable over completed sections of each cable while the remainder is threaded. Masking tape can also be used for this purpose

b) Ends of the cable can be prevented from fraying by placing a drop of 'superglue' on the end of area where it is to be cut. The excess should be wiped off on a pice of paper.

NB. This process also stiffens the end which is useful when threading the cable through the pulleys.

c) Ensure all grub screws are in position but are not obstructi the cable holes. Also check there are no burs remaining from machining blocking the holes.

d) The cables can be threaded before the arm is bolted for the shoulder which eases the problems of access considerably. The 'grip action' cable tail can be taped or clipped to the arm and connected and tensioned with its spring after the arm is fitted to the shoulder,

e) When tensioning the cable, if it is passed through the clamp and back, then connected to the spring adequate tension can applied by pulling the 'free tail' and then nipping it with grub screw. A frined will be useful if around, but it is quite possible without. The correct tension can be easily judged, as when completed the coils of the spring should be just separated, though this is not critical.

f) During threading the correct 'route' can be ascertained from the expanding drawings. It is very important these should be followed exactly especially the position of the grub screws when they are tightened on the cable. If this is wrong it will effect the performanc of the arm.

g) Care should be taken to avoid the cable kinking or crossing itself on the drums.

h) Experience has shown that the best order to thread the cables and lenths to use. (Excess can be trimmed easily later but makes tensioning simpler)

First	-	Wrist cables one at a time	1.47m (each)
Second	-	Elbow cable (set up the spring pillar first - M3 x 10mm cheesehead and 2 M3 hex full nuts) attach crimped cable clamp to forearm first using M3 x 10 chhese head and two nuts as a cable pillar	0.95m
Third	-	Single finger cable (fix to the hand sheave pulley using M3 x 6mm cheesehead and crimped cable clamp	0.18m
Fourth	-	Double finger cable (loop over small hand sheave pulley on grip action pulley and adjust so that G A P is even when pulleys are evenly positioned)	0.36m
Fifth	-	Grip action cable (start at end fixed in cable drum and stick other end to arm while fitting it to the shoulder then tension with the spring to the shoulder base pan.	1.3 m

i) Ends using the crimped cable eyelets should be threaded through the eyelet and a small thumb knot tied to prevent the cable slipping before crimping the bracket using crimping or ordinary pliers. So not crimp too light or you may cut through cable, though KEVLAR is very tough.

DRAWING NUMBER A2/ /

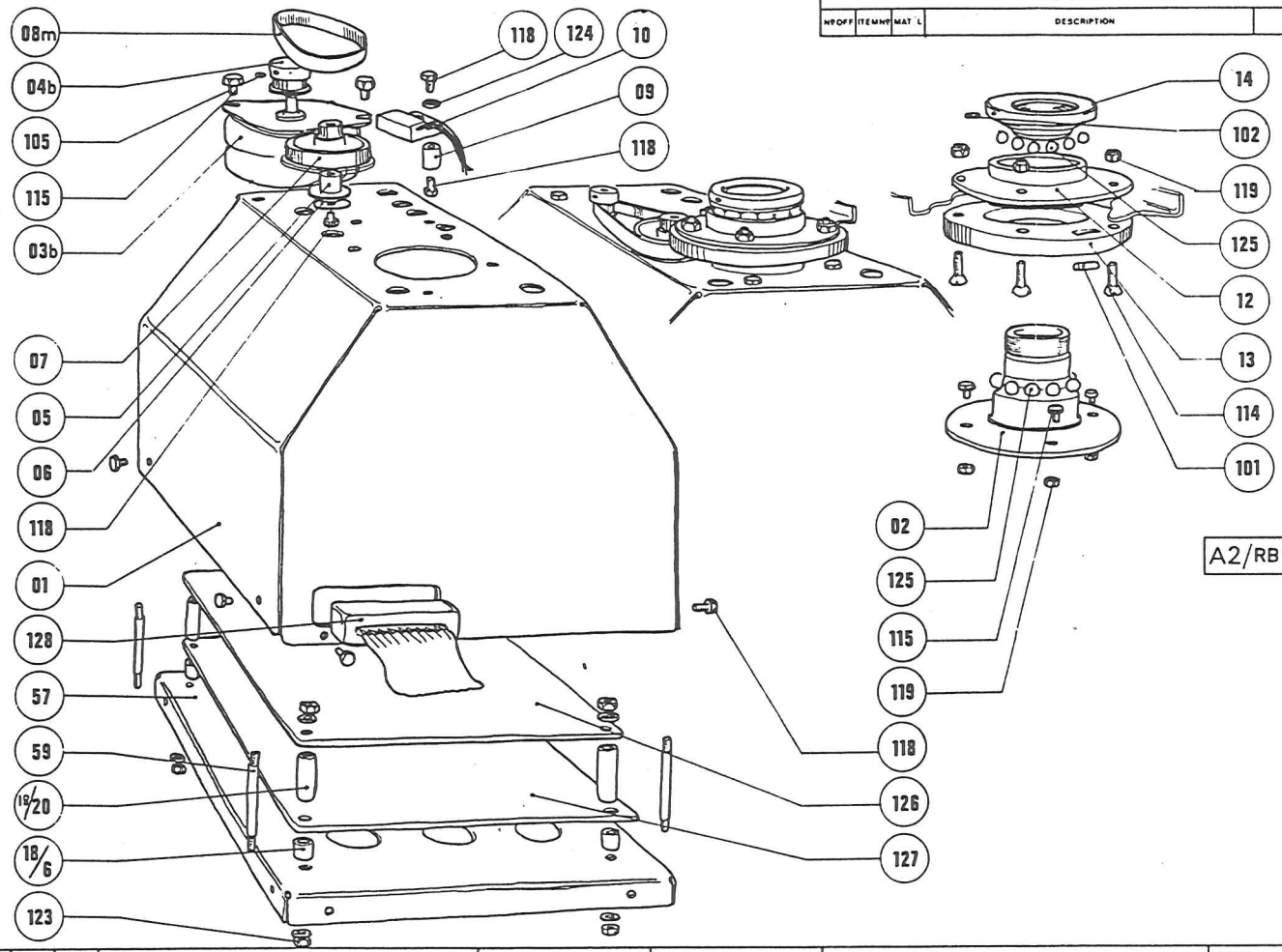

BILL OF MATERIAL

No OFF	ITEM No	MAT'L	DESCRIPTION	REMARKS

A2/RB1 / 1

No	DATE	DESCRIPTION	MADE BY	CHECK'D BY

REVISIONS

REFERENCE DRAWING

AUTH. No. .....
PROJECT No. .....
WORK ORDER No. .....

SCALE .....

DESIGNED .....
DRAWN .....
CHECKED .....
APPROVED .....
APPROVED .....

DEPARTMENT

COLNE ROBOTICS

PRINT ISSUED .....

DATE DRAWN .....

DRAWING NUMBER A2/RB1/1

DRAWING NUMBER A2/ /

BILL OF MATERIAL

No OFF	ITEM No	MAT L	DESCRIPTION	REMARKS

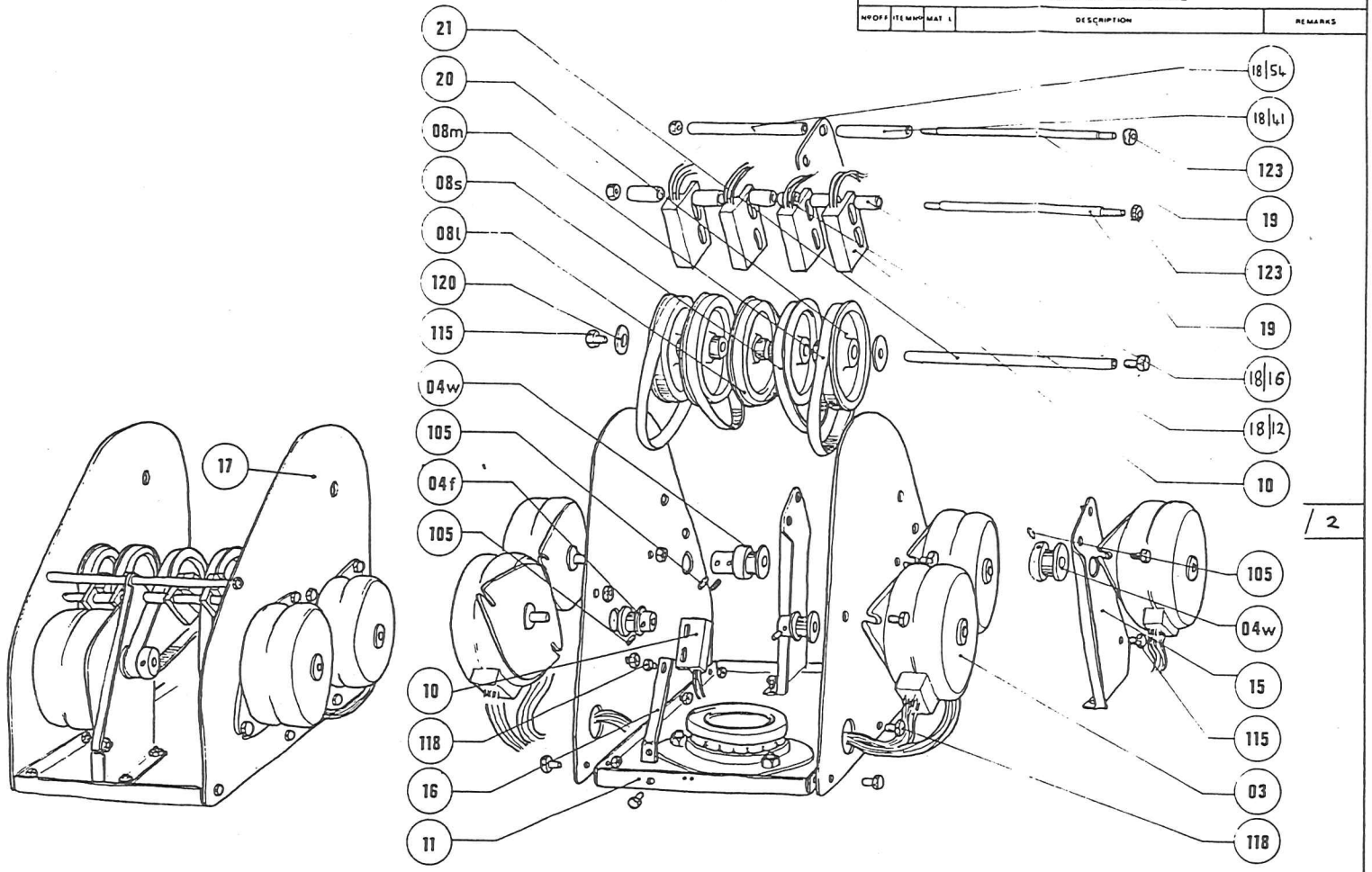

/ 2

No	DATE	DESCRIPTION	MADE BY	CHECK'D BY

REVISIONS

REFERENCE DRAWING

AUTH. No.
PROJECT No.
WORK ORDER No.
SCALE

DESIGNED
DRAWN
CHECKED
APPROVED
APPROVED

DEPARTMENT

COLNE ROBOTICS

PRINT ISSUED
DATE DRAWN
DRAWING NUMBER A2/RB1/2

DRAWING NUMBER A2/ /

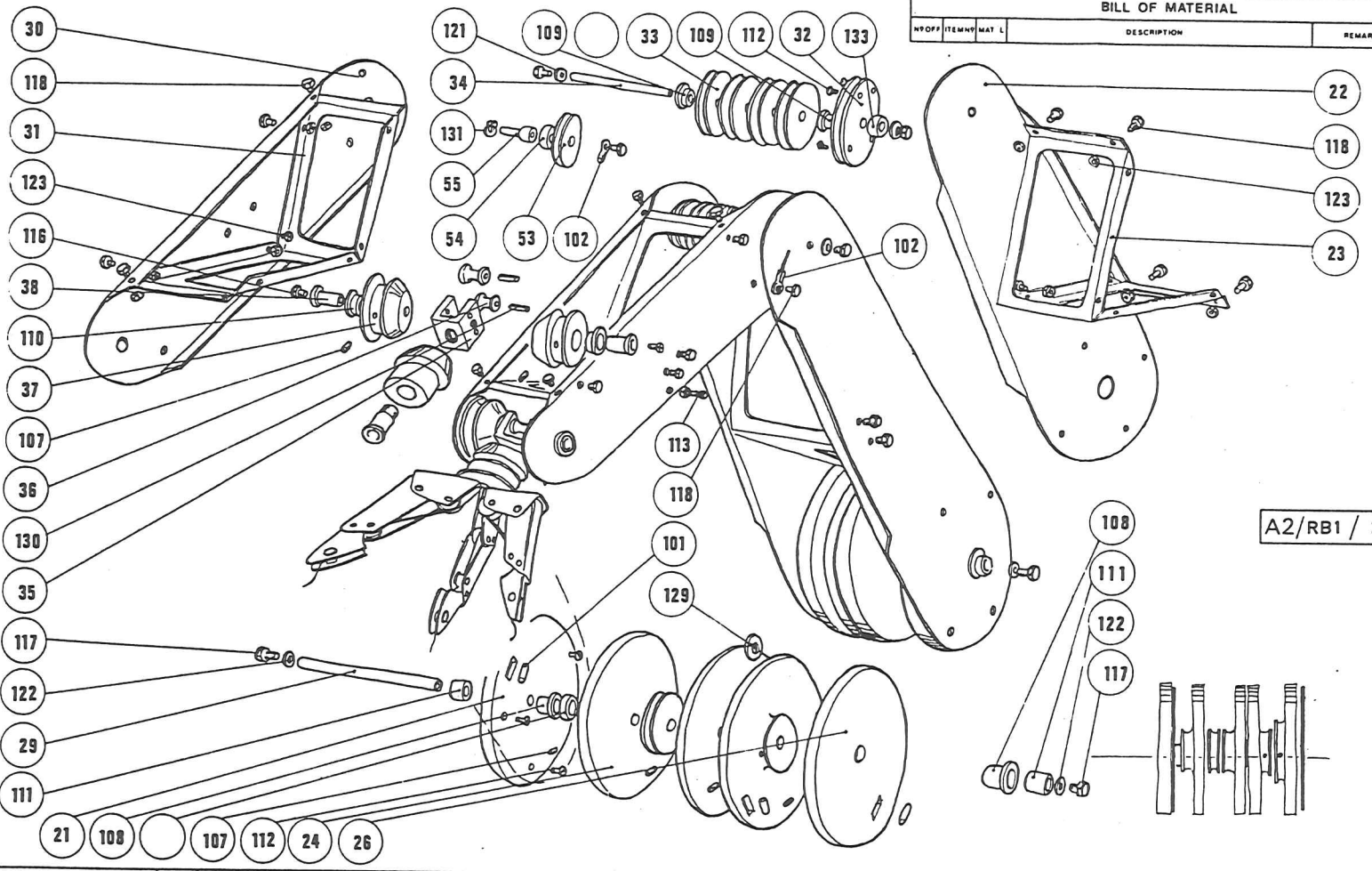

BILL OF MATERIAL

Nº OFF	ITEM Nº	MAT L	DESCRIPTION	REMARKS

Nº	DATE	DESCRIPTION	MADE BY	CHECK'D BY

REVISIONS

REFERENCE DRAWING

AUTH. Nº.....
PROJECT Nº.....
WORK ORDER Nº.....
SCALE.....

DESIGNED.....
DRAWN.....
CHECKED.....
APPROVED.....
APPROVED.....

DEPARTMENT

COLNE ROBOTICS

PRINT ISSUED.....
DATE DRAWN.....
DRAWING NUMBER A2/RB1/3

DELTAPRINT 21177

DRAWING NUMBER A2/ /

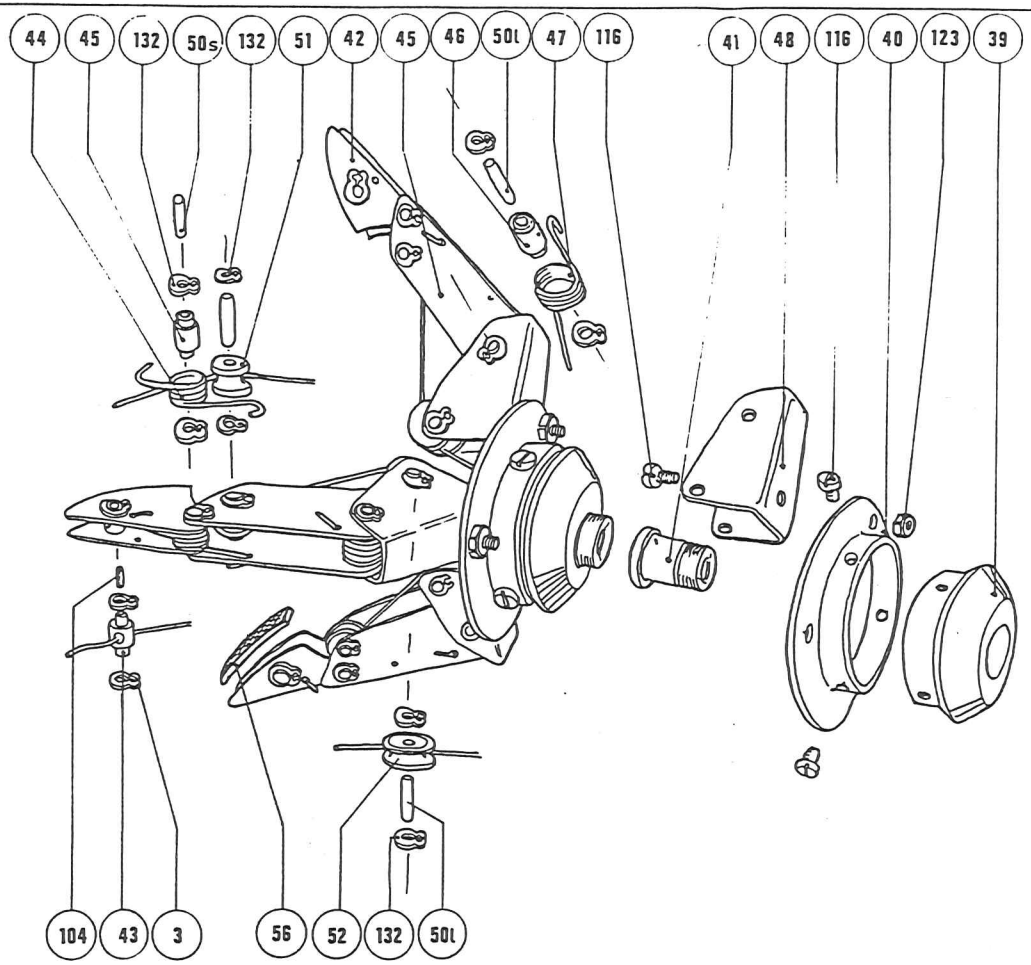

BILL OF MATERIAL

No OFF	ITEM No	MAT L	DESCRIPTION	REMARKS

A2/RB1 / 4

No	DATE	DESCRIPTION	MADE BY	CHECKED BY

REVISIONS

REFERENCE DRAWING

AUTH. No. .....
PROJECT No. .....
WORK ORDER No. .....

SCALE .....

DESIGNED .....
DRAWN .....
CHECKED .....
APPROVED .....
APPROVED .....

DEPARTMENT

COLNE ROBOTICS

PRINT ISSUED .....
DATE DRAWN .....
DRAWING NUMBER A2/RB1/4

DELTAPRINT 21777

DRAWING NUMBER A2/ /

BILL OF MATERIAL

No OFF	ITEM No	MAT L	DESCRIPTION	REMARKS

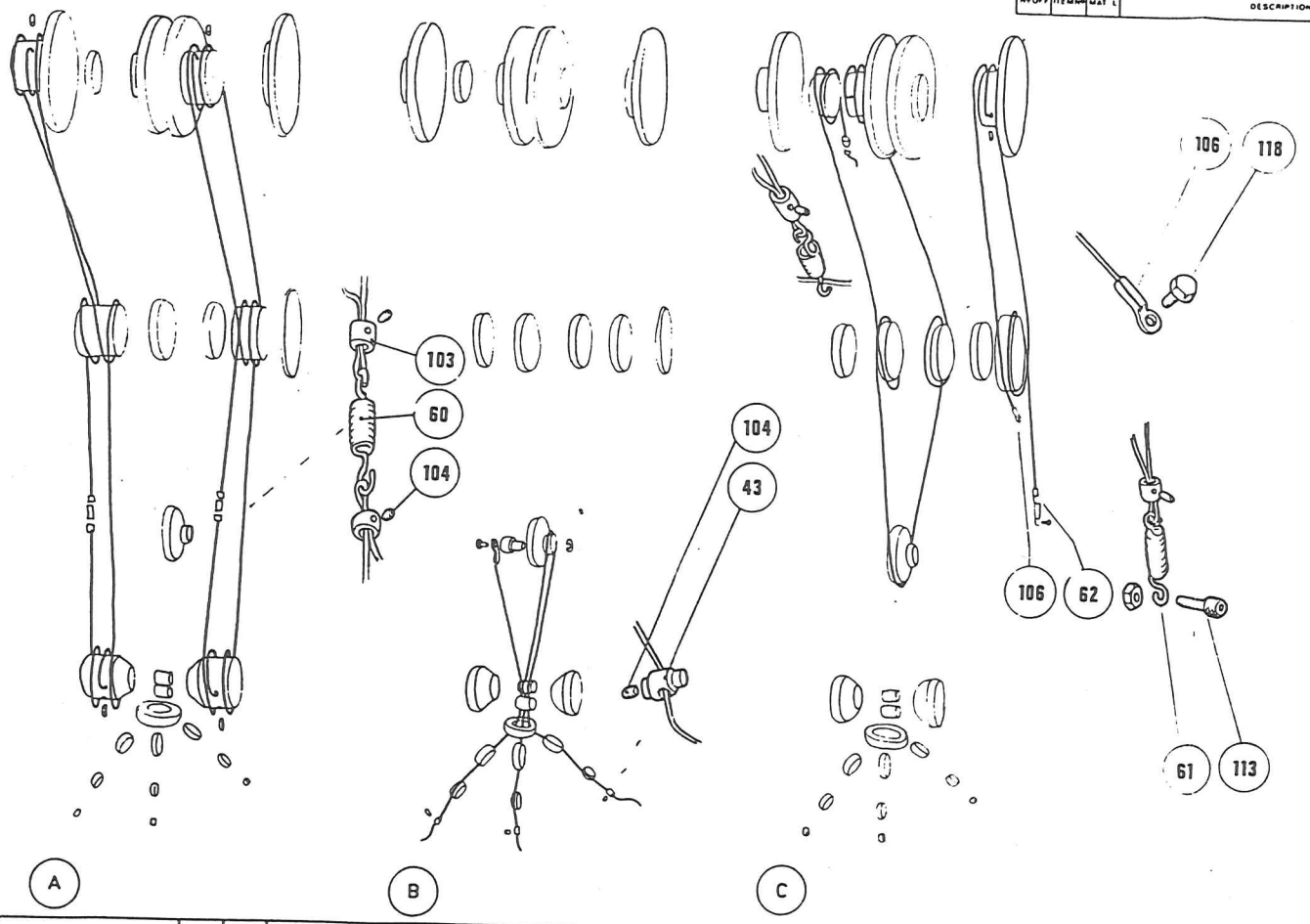

A2/RB1 / 5

No	DATE	DESCRIPTION	MADE BY	CHECK'D BY

REVISIONS

REFERENCE DRAWING

AUTH. No.
PROJECT No.
WORK ORDER No.

SCALE

DESIGNED
DRAWN
CHECKED
APPROVED
APPROVED

DEPARTMENT

COLNE ROBOTICS

PRINT ISSUED
DATE DRAWN

DRAWING NUMBER A2/RB1/5

E

L

E

C

T

R

O

N

I

C

S

ELECTRONICS

3.1 Description

The Interface

To enable the Armdroid to function with as wide a range of microprocessor equipment as possible, the interface is designed round a standard 8-bit bidirectional port. This may be latched or non-latched. If non-latched, the interface will normally be used to input data to the micro.

In the output mode the port is configured as follows. The eight lines are defined as four data bits (D8-D5), three address bits (D4-D2) and one bit (D1) to identify the direction of data travel on the port. Four data lines are provided so that the user can control the stepper motor coils direct from computer.

The address bits are used to channel the step pattern to the selected motor. The three address bits can define eight states, of which 1-6 are used to select one of the motors, while states 0 and 7 are unallocated.

D1 indicates the direction of data travel, to the motors when D1 is low, from the microswitches, if installed, when D1 is high. The transition of D1 from high to low generates a pulse which causes the step pattern to be latched into the addressed output latch.

In the input mode D8 - D3 are used to read the six microswitches on the arm. These reed switches and magnets provide a "zero" point for each of the movements of the arm, which can be used as reference points for resetting the arm in any position before a learning sequence begins.

D2 is spare. It is an input bit which can be buffered and used for an extra input sensor, allowing the user to connect a 'home brew' transducer to the system..

The interface circuitry consists of twelve TTL components which decode the data and route it out to the selected motor driven logic. IC1 and IC2 buffer the data out to the decoder and latches. IC6 decodes the three input address bits to provide eight select lines, six of which are for the latches IC7 - IC12.

INTERFACE ONLY

D1 is buffered and fed into a monostable (IC4) to generate a clock pulse. This causes the decoder to provide a latch pulse for approximately 500ns to the addresses motor control latch. D1 is tied to pull-up resister (R1) so that the line is high except when are output from the microprocessor. The buffers IC1 and IC2 are enabled by the buffered output of bit 1 so that data are fed to the latch inputs only when bit 1 is low. The bit 1 buffer is always enabled because its enable is tied low.

The microswitch inputs are buffered by IC5 which is enabled by the complemented output of bit1, so that when bit1 is high IC5 is enabled, and the contents of the microswitches will be input to the microporcessor. This allows the user to operate the arm under bit interupt control, giving instant response to a microswitch change and avoiding having to poll the micro-switches. The six microswitch inputs are pulled up; thus the switches can be connected via only one lead per switch, with the arm chassis acting as ground.

THE MOTOR DRIVERS

the motor drivers are designed so that the arm can be driven from the output of the computer interface circuitry.

The six motor driver stages need two power supplies: 15v at about 3A and 5v at 150 MA.

The four waveforms QA-QD are then fed into IC's 13-16 which are 7 x Darlington Transistor IC's. These provide the high current needed to drive the stepper motor coils, the driving current being about 300 MA at 15v.

INTERFACE DRIVER BOARD

ITEM	VALUE	QUANTITY
Resistors		
R1	1KO	1
R2	10K	
R3-8	2K2 resitor network	1
R9	1K8	
R10	1K8	
R11	1K8	3
R12	15K	1
R13	10K	2
R14	18ohm 5w	1
R15-R20	1KO	6
Capacitors		
C1	100p polystyrene	1
C2	1.0vf Tant	1
C3-C15	10nf ceramic	13
Semiconductors		
IC1	74LS 125	
IC2	74LS 125	2
IC3	74LS 04	1
IC4	74LS 123	1
IC5	74LS 366	1
IC6	74LS 138	1
IC7-IC12	74LS 175	6
IC13-IC16	ULN2003A	4
IC17	UA 7805	1
ZD1	BZX 13v ZENER	1

Miscellaneous

MXJ 10 way edge connector
5 way PCB plug and socket connector
Through Pins
16 pin IC sockets
14 pin IC sockets
4 way modified PCB plug and socket

GENERAL ASSEMBLY SEQUENCE FOR THE PC BOARD

A Fit all of the through pins to the board.

B Fit and screw the 5v regulator to the board.

C Identify and fit the resistors and the 13v zener to the board. The black band v points to the motor connectors (on the zener DlODE).

D Identify and fit all capacitors to the board.

E Solder the 2k2 resistor network, IC sockets, and the 4 and 5 way PCB plugs to the board.

G Solder the lO way socket to the board.

NOTE:

Refer to the overlay diagram and parts list to ensure that the resistors, capacitors, IC,s and other parts are inserted into the correct locations on the PC Board.

BASIC BOARD CHECKS

A Check the board for dry joints and re-solder any found.

B Hold the board under a strong light source and check the underside to ensure there are no solder bridges between the tracks.

FITTING THE PC BOARD TO THE BASE OF THE ROBOT

The PCB should be fitted to the base plate using the nylon pillars provided.

MOTOR CONNECTION

Connect the motors to the 5way sockets, ensuring correct 15v polarity, via the ribbon cable, refering to the diagram provided to ensure correct connection.

POWER CONNECTION

Connect the power to the modified 4way socket ensuring correct polarity as shown below.

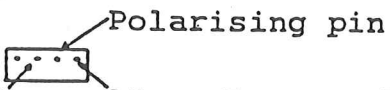

ue = Pin 1 on I/P connector=Ov 15v = Brown = Pin 2 on I/P connector

NOTE

A number of diagrams are given, explaining in detail the inter-connections between the motors and the PCB, if the motors are connected in the manner shown then the software provided will map the keys 1-6 and q,w,e,r,t,y to the motors in the following way.

1, q, = GRIPPER. 2, w, = left wrist. 3, e, = right wrist.

4, r, = forearm. 5, t, = shoulder. 6, y, = base.

as shown in the diagram, the two middle pins of the stepper motors should be connected together and to 15v.

Motor Connection And Designation Layouts

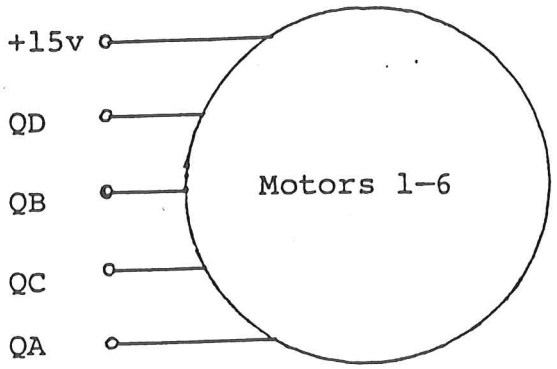

Ribbon Cable To Stepper Motor Connections

Qa Black or Green
Qb Red or Purple
Qc Brown or Blue
Qd Orange or Grey
+15v Yellow or white

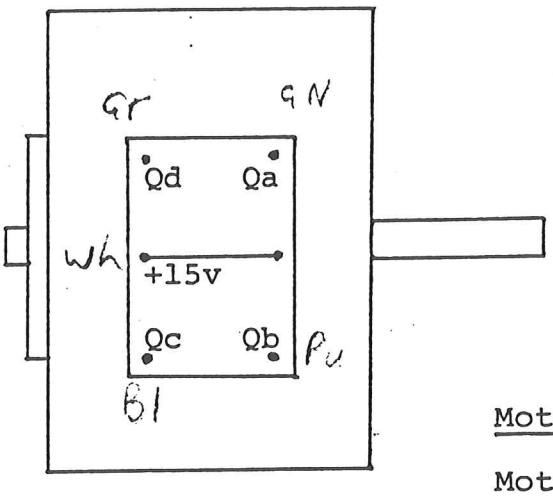

Motor Assignments To Functions

Motor 1 = Grip
Motor 2 = Left Wrist
Motor 3 = Right Wrist
Motor 4 = Elbow
Motor 5 = Shoulder
Motor 6 = Base

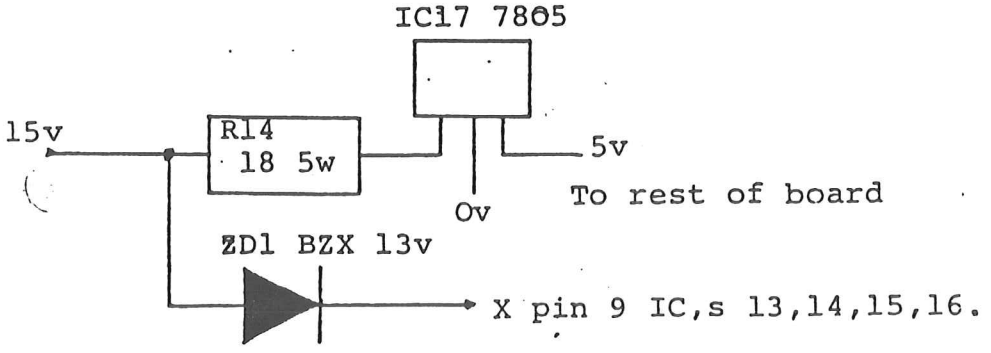

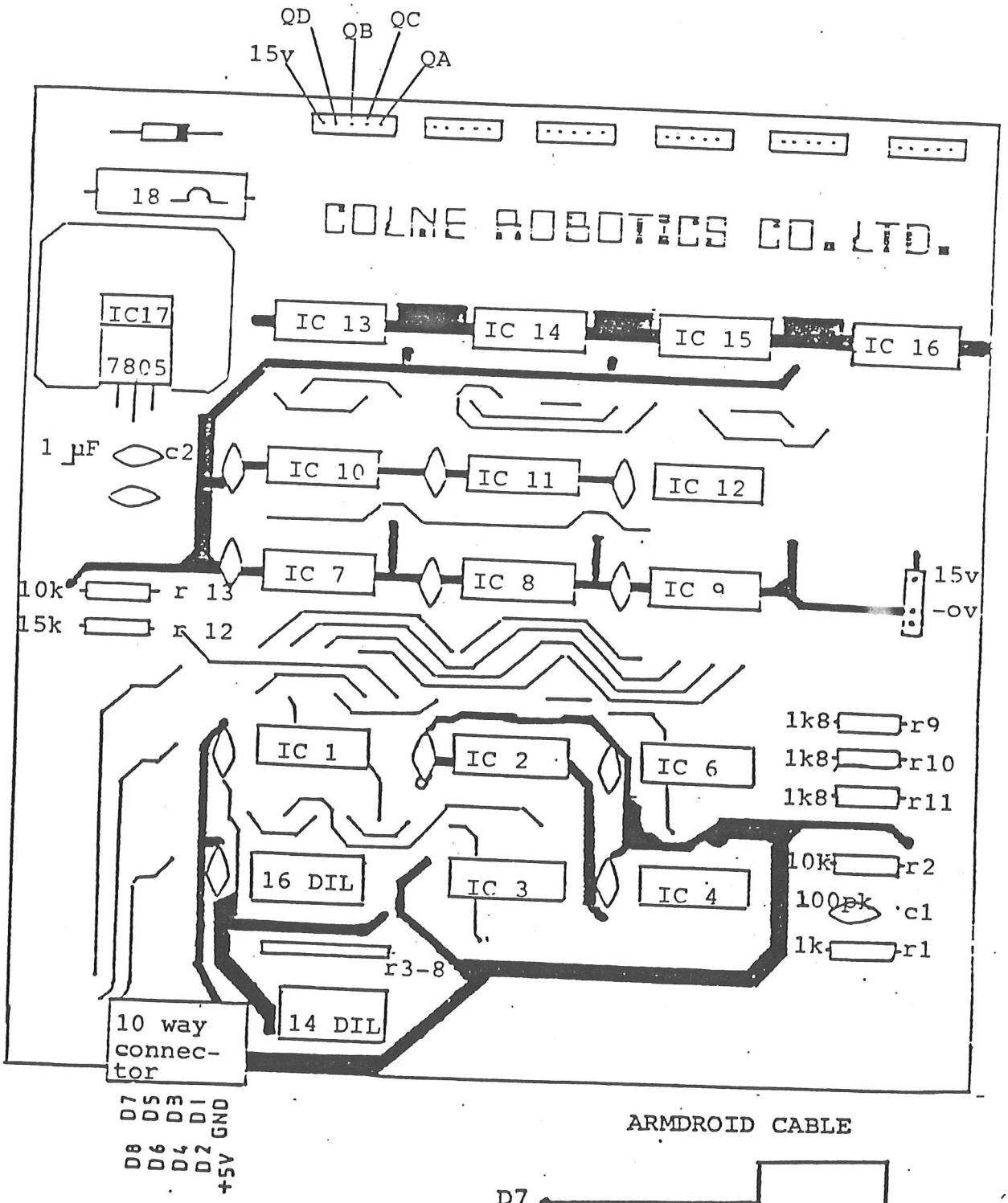

All other Cap 10nf

ARMDROID CABLE

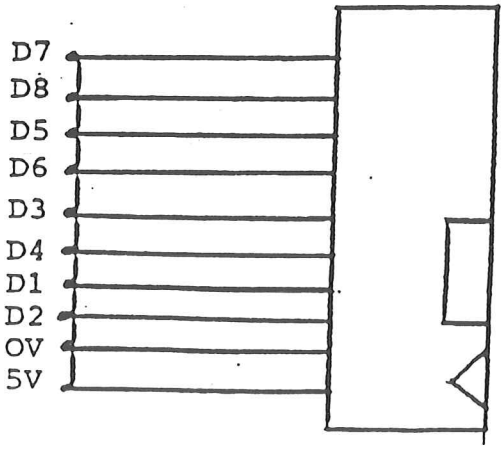

SINGLE INTERFACE BOARD CIRCUIT DIAGRAM

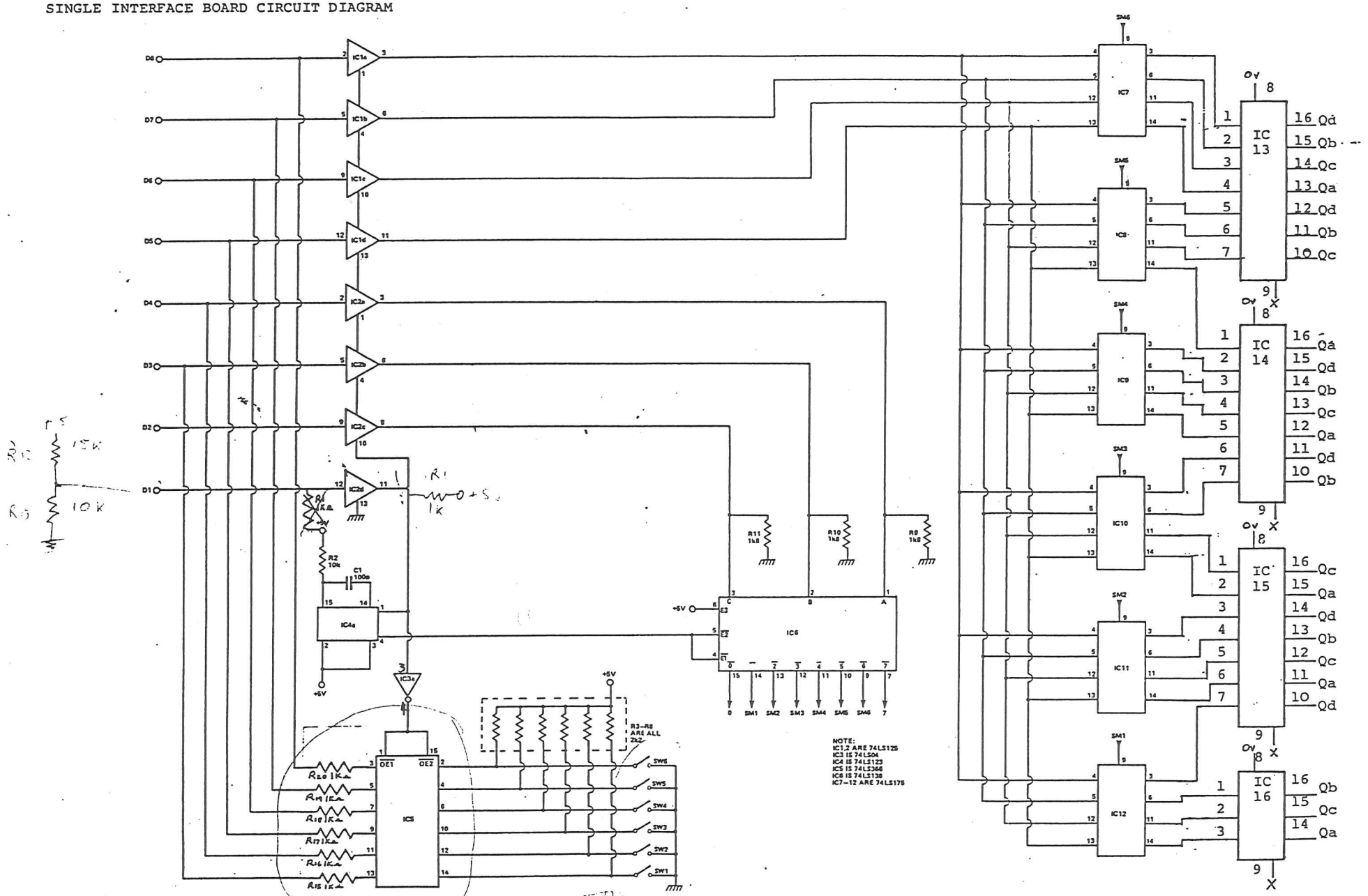

S

O

F

T

W

A

R

E.

4. SOFTWARE

4.1 Introduction

A machine code program, LEARN , to drive the ARMDROID has been specially written. It was designed for the Tandy TRS-80 Model 1 Level 11, and the loading instructions given here apply to that computer. But the program can be easily adapted to any Z80 microprocessor with the necessary port, and versions made available for the leading makes with variations of these instructions where appropriate. But of course users can write their own software in whatever language they choose.

4.2 Loading

When in Basic type SYSTEM, press ENTER, answer the '*' with LEARN and then press ENTER again. The cassette tape will take about 1½ minutes to load. Answer the next '*' with / 17408 and press ENTER.

4.3 General Description

LEARN is a menu-oriented program for teaching the ARMDROID a sequence of movements which it will then repeat either once or as many times as you like. The program is divided into four sections, one for learning the sequence and for fine-tuning it, one to save the sequence on tape and load it again , one for moving the arm without the learning function, and finally two exit commands.

We suggest that, if this is your first encounter with the program, you should read quickly through the commands without worrying too much about understanding all the details. Then go to Section 4.5 and follow the 'Sequence for Newcomers'. This will give you a good idea of what the program does. After that you can begin to discover some of the subtleties of planning and fine-tuning sequences of movements.

4.4 Explanation

L(EARN)

Stores a sequence of manual movements in memory. The arm is moved using the commands explained under M(ANUAL) . You can exit the command by pressing 0 (zero) , press G(O), and the arm will repeat the movement you have taught it.

On pressing L(EARN) you will be asked whether you want the S(TART) again or C(ONTINUE) from the current position. The first time press S(TART) . The arm is then free to be moved by hand without the motors' torque preventing you. Move it to a suitable starting position, then press the space bar. You will find that you cannot now move the arm by hand.

To add a sequence already in memory press C(ONTINUE) instead of S(TART).

Using the manual commands, move the arm to another position. As it goes the computer is adding up the steps each motor is making, either forward or back, and storing the data in memory. (holding the space bar down during manual control slows the movement)

Exit by pressing 0 (zero).

D (ISPLAY)

Displays the sequence stored in memory. The sequence can be edited with the E(DIT) command.

The six columns of figures correspond to the six motors, and the order is the same as that of the 1-6/Q-Y keys (see M(OVE). The first row (RELPOS) shows the current position. Each row represents a stage of the movement, and the actual figures are the number of steps each motor is to make, positive for forward, negative for reverse. The maximum number of steps stores in a row for one motor is +127 or -128, so if a movement consists of more than this number it is accomodated on several rows.

Movements of the arm can be fine-tuned by editing (see E(DIT)) the figures on display until the arm is positioned exactly.

Scrolling of the display can be halted by pressing 0 (zero). To continue scrolling, press any other key. To display the figures one after the other, keep pressing 0.

E(DIT)

Allows the user to change the figures in the memorised sequence.

Truncate a sequence by pressing R(OW COUNT), then ENTER, then the number of the last row you want performed, and finally ENTER. This clears the memory from the next step pnwards, so you should only do this if you do not want the rest of the sequence kept in memory.

By pressing M(OTOR STEP), you can change any of the numbers in any row and column.

S(ET ARM)

Sets the current position of the arm as the 'zero' or starting position.

When pressed from the Menu, it simply zeroes the first row of the display.

(ET ARM) has another function. During a L(EARN), pressing S(ET ARM) t any moment when the arm is at rest will ensure that the movements efore and after are separated from each other instead of being merged. his is the way to make quite sure that the arm passes through a articular point during a sequence. Try the same two movements ithout pressing S(ET ARM), and note the difference in the display.

It is important to realise that, if a sequence has been memorised and S(ET ARM) is pressed from the Menu when the arm is not in its original starting position, pressing G(O) will take the arm through the sequence but from the new starting point. This can be useful for adjusting the whole of a sequence (perhaps slightly to right or left), but it can lead to the arm running into objects if the new starting point is not selected with care.

W(RITE)

Writes a memorised sequence to cassette tape.

R(EAD)

Reads a previously written sequence from cassette tape into memory

C(HECK)

Compares a sequence written to cassette tape with the same sequence still in memory, to verify the tape.

G(O)

Moves the arm through a memorised sequence, either once or repeate

It is important to make sure that the starting point in memory is the right one, or the sequence may try to take the arm into impossible positions. (see S(ET ARM)

T(O START)

Takes the arm back to the zero or starting position.

F(REE)

Removes the motors torque from the arm, thus allowing it to be moved by hand.

M(ANUAL)

Gives the user control of the movements of the arm direct from the keyboard. It is used (a) for practising manual control before L(EARN)ing, (b) for trying new combinations of separate movements and (c) for moving the arm to a new starting position before press S(ET ARM). Holding the space bar down slows the movement by a fac about 3.

The motors are controlled with the keys 1-6/Q-Y. The keys operate pairs, each pair moving a motor forwards and backwards. Any combi of the six motors may be moved together (or of course separately), but pressing both keys of a pair simply cancels any movement on that motor.

The geometry of the arm is designed to give the maximum flexibilit combined with maximum practicality. A movement of one joint affec only that joint: with some designs one movement involuntarily produces movement in other joints.

It is a feature of the ARMDROID that it has a so-called 'parallelogram' operation. Starting with the upper arm vertical, the forearm horizontal and the hand pointing directly downwards, the shoulder joint can be rotated in either direction and the forearm and hand retain their orientation. Equally the forearm can be raised and lowered while leaving the hand pointing downwards. Moving the arm outwards and down by rotating both the shoulder joints together still leaves the hand vertical. This is of vital importance for simplifying the picking and placing of objects.

The motors controlled by the keys are:

1/Q: Gripper
2/W: Wrist left
3/E: Wrist right
4/R: Forearm
5/T: Shoulder
6/Y: Base

B(OOT)

Returns the computer to the program start and clears the memories.

Q(UIT)

Returns the computer to TRS80 System level.

ARM TRAINER MK2AL

DIRECT FULL STEP MOTOR CONTROL

FOR TRS8Ø MODEL 1, LEVEL 11

BY ANDREW LENNARD

*** July 1981 ***

SECTION 1

A SYSTEM EQUATES

B SYSTEM VARIABLES

C SYSTEM CONSTANTS

4.5 INTRODUCTORY DEMONSTRATION SEQUENCE

1. After loading the program, the screen shows the menu. Press L to enter L(EARN).

2. Screen: START AGAIN OR C(ONTINUE) FROM PRESENT POSITION, (.) TO EXIT. Press S

3. Screen: " ARM RESET
   ARM NOW FREE TO MOVE
   TYPE SPACE BAR WHEN READY, OR FULL STOP TO EXIT"
   Now move the arm so that both arm and forearm are vertical with the hand horizontal. For coarse movements grasp the forearm or upper arm and move it. For fine adjustments and for movements of the hand, it is better to use the large white gear wheels in the shoulder joint. Press the space bar and the arm will become rigidly fixed.

4. Screen: "*** TORQUE APPLIED ***"
   You can now move the arm using the 1-6/Q-Y keys as explained in the manual section. Try just one movement alone at first. Now press 0 (zero) to exit from L(EARN). The arm will return to the starting position, and the Menu appears on the screen.

5. Screen: Menu. Press D for D(ISPLAY).

6. Screen: Display and Menu. The numbers of steps you applied to each motor have been memorised by the computer, and these steps are now displayed see D(ISPLAY) section for explanation. Press G for G(O).

7. Screen: "DO (F) OREVER OR (O) NCE?. Press O (letter O), and the arm will repeat the movement it has learnt.

8. Screen: "SEQUENCE COMPLETE" and Menu. Press L.

9. Screen: as 2 above. This time press C. Now you can continue the movement from this position, using the 1-6/Q-Y keys as before. Now press 0 (zero). Again the arm returns to its original position.

10. Screen: Menu. Press D

11. Screen: Display and menu. Your new movement has been added to your first. Press G.

12. Screen: as 7 above. This time press F. Each time a sequence is started a full point is added to the row on the screen. To stop press full point.

This is a very simple demonstration of how complex movements can be built up, learnt as a sequence and then repeated endlessly and with great accuracy.

STEM EQUATES

```
RT      EQU   ~~Ø4~~      ;  ARM PORT NUMBER        (37E8H)
RSCN    EQU   Ø1C9H
NAD     EQU   02B2        ;  SYSTEM RESTART         (402DH)

~~HR~~     ~~EQU~~   ~~ØØ33H~~   ;  SYSTEM PRINT CHARACTER
TCHR    EQU   Ø33AH
HR      EQU   ØØ49H       ;  SYSTEM GET CHARACTER

D       EQU   ØØ2BH       ;  SCAN KEYBOARD

TSTR    EQU   28A7H       ;  SYSTEM PRINT STRING

SON     EQU   Ø212H       ;  CASSETTE ON

SOF     EQU   Ø1F8H       ;  CASSETTE OFF

HDR     EQU   Ø296H       ;  READ HEADER ON CASSETTE

EADC    EQU   Ø235H       ;  READ CHARACTER FROM CASSETTE

LDR     EQU   Ø287H       ;  WRITE HEADER TO CASSETTE

RBYA    EQU   Ø264H       ;  WRITE CHARACTER TO CASSETTE

INUS    EQU   '-'         ;  ASCII MINUS

PAC     EQU   '-'         ;  ASCII SPACE

L       EQU   ØDH         ;  ASCII NEW LINE

UMBA    EQU   3ØH         ;  ASCII NUMBER BASE

AXLE    EQU   1Ø          ;  UPPER BOARD FOR ARST ROW COUNTER
LRSC    EQU   Ø1C9H       ;  CLEAR SCREEN

        ORG   174Ø 8      ;  = 44ØØ TRS8Ø HEX ADDRESS
                          ;  FOR START OF PROGRAM
```

VARIABLES USED

```
MIN         DEFB ØØ      ; Has value of one if number input negati
MAN         DEFB ØØ      ; If MAN = zero then steps are stored
STRFG       DEFB ØØ      ; If STRFG non zero then store TBUF array
KEYP        DEFB ØØ      ; Set if key pressed in KEYIN Routine
FORFG       DEFB ØØ      ; Set if sequence to be done forever

COUNT       DEFB ØØØØ    ; Number of motor slices stored
CUROW       DEFB ØØØØ    ; Pointer to next free motor slice

ARRAYS N    EQU 51K

NUMAR       DEFS 1Ø      ; Store used for Binary to ASCII Conversic
                         ; Routine CTBAS

POSAR       DEFS 12      ; Each two bytes of this six element array
                         ; contain on value which is used to
                         ; keep track of each motors motion,
                         ; hence the array can be used to reset
                         ; the arm, moving it into a defined
                         ; start position.
                         ; Each 16 bit value stores a motor
                         ; steps in two's complement arithmetic.

CTPOS       DEFS  6      ; 6 Bytes, each relating to a motor.
                         ; A number from 1-4 is stored in
                         ; each bytes and this is used to
                         ; index the FTABL (see constant definition

TBUF        DEFS  6      ; When learning a move sequence the
                         ; six motors motions are stored in this
                         ; six byte array.  Each byte relates
                         ; to a motor and holds a motor step
                         ; count in the range -128 to +127
                         ; If the motor changes direction or a
                         ; count exceeds the specified range then
                         ; the whole TBUF array is stored in
                         ; the ARST array and the TBUF array
                         ; is cleared.
                         ; TBUF means temporary buffer.

DRBUF       DEFS  6      ; Each byte relates to the previous
                         ; direction of a motor.

MOTBF       DEFS  6      ; A six byte array used by DRAMT to
                         ; tell which motors are being driven, and
                         ; in which direction.
                         ; Bit zero set if motor to be driven
                         ; Bit one set if motor in reverse
                         ; Byte zero if motor should not be driven.

ARST        DEFS N*6     ; This array holds the sequence that
                         ; the user teaches the system.  The array
                         ; consists of N*6 bytes where N is
                         ; the number of rows needed to store the
                         ; sequence.
```

ANTS USED

HALF-STEPPING

FTABL DEFB 192 ; 128
DEFB 144 ; 16
DEFB 48 ; 32.
DEFB 96 ; 64

; FTABL is a small table which defines the
; order of the steps as they are sent out
; to the arm. To drive each motor the
; DRAMT routine adds the motors offset
; which is obtained from CTPOS and adds
; this to the FTABL start address -1. This
; will now enable the DRAMT routine to
; fetch the desired element from the FTABL
; array, and this value is then sent to
; the motor via the output port.

SECTION 2

COMMAND ROUTINES

```
        CONSTANTS AND ARRAYS
        STRINGS


        SIGON   DEFM            '                       *** COLNE ROBOTICS ARM CONTROLLER
(AL2)   ***'
                DEFW            ØØØDH
        RELYQ   DEFB            ØDH
                DEFM            'REALLY QUIT? (Y/N)'
                DEFW            ØØ
        SIGOF   DEFW            ØDØDH
                DEFM            'YOU ARE NOW AT TRS8Ø SYSTEM LEVEL'
                DEFW            ØØ
        ECOMS   DEFM            'EDIT (M)OTOR STEP, OR (R) OW COUNT?'
                DEFW            ØØØDH
        COUTS   DEFM            'NEW UPPER ROW BOUND IS?'
                DEFB            ØØ
        EDSTR   DEFM            'ROW NUMBER?'
                DEFB            ØØ
        BADMS   DEFM            '*** BAD INPUT VALUE ***'
                DEFW            ØØØDH
        MOTNS   DEFM            'CHANGE STEPS ON WHICH MOTOR?'
                DEFB            ØØ
        NVALS   DEFM            'REPLACEMENT STEP VALUE?'
                DEFB            ØØ
        QUESS   DEFM            'LRN, READ, CHECK,WRITE, GO, DISP, BOOT, MAN,
                                QUIT,  SETA, TOST, EDT, FREE
                DEFW            ØØØDH
        RORNM   DEFM            'DO (F)OREVER OR (O)NCE?'
                DEFB            ØØ
        CASRD   DEFM            'TYPE SPACE BAR WHEN READY, OF FULL STOP TO EXIT
                DEFB            ØØ
        QMESS   DEFM            'PARDON'
                DEFW            ØØØDH
        BOOTS   DEFB            ØDH
                DEFM            'WANT TO RE-START (Y/N)?'
                DEFB            ØØ
        RELNS   DEFM            'START AGAIN OR (C)ONTINUE FROM CURRENT POSITION
                                (.) TO EXIT
                DEFW            ØØØDH
        DISPS   DEFB            ØDH
                DEFM            ' *** MOVEMENT ARRAY DISPLAY *** '
                DEFB            ØDH
                DEFW            ØØØDH
        NODIS   DEFM            '*** NO SEQUENCE IN STORE ***'
                DEFB            ØDH
                DEFW            ØØØDH
        OVFMS   DEFM            'NO MORE ARM STORE LEFT, DELETE OR SAVE?'
                DEFW            ØØØDH
        DONMS   DEFB            ØDH
                DEFM            'SEQUENCE COMPLETE'
                DEFW            ØØØDH
        RDMSG   DEFM            '*** READ ERROR ***'
                DEFW            ØØØDH
        TAPOK   DEFM            '*** TAPE OK ***'
                DEFW            ØØØDH
        STRST   DEFM            'ARM RESET'
                DEFW            ØØØDH
        NOTOR   DEFM            'ARM NOW FREE TO MOVE'
```

```
        DEFB    ØØØDH
TORMS   DEFB    ØDH
        DEFM    '*** TORQUE APPLIED ***'
        DEFW    ØØØDH
POSST   DEFM    'RELPOS='
        DEFB    ØØ
```

COMMAND INDEX

STARM.....4-12..... Program entry point
LEARN.....4-13..... Learn a sequence command
EDIT.....4-14..... Edit a sequence command
READ.....4-16..... Read in sequence from tape command
WRITE.....4-17..... Write sequence to tape command
CHECK.....4-18..... Check stored sequence command
BOOT.....4-19..... Re-start system command
FINSH.....4-19..... Exit from system command
SETARM.....4-20..... Set start position command
TOSTM.....4-20..... Move arm to start position command
FREARM ...4-20..... Free all arm joints
MANU.....4-20..... Go into manual mode
GO .....4-21..... Execute stored sequence command
DISPLAY...4-22..... Display stored Sequence command

MAIN LOOP

```
;  Program start

STARM       CALL  CLRSC     ;  Clear the TRS8Ø Screen
            LD    HL,SIGON  ;  Point to sign on message
            CALL  PSTR      ;  Print it
            CALL  PNEWL     ;  Print a new line
            CALL  INIT      ;  Set up system
QUES1       CALL  DELT      ;  Small delay
            LD    HL,QUESS  ;  Point to menue string
            CALL  PSTR      ;  Print it
            CALL  GCHRA     ;  Get response and print it
            CALL  PNEWL     ;  Print new line
            CP    NL        ;  Is response a newline
            JR    Z,QUES1   ;  Yes then ignore
            CP    'L'       ;  Is response an 'L'
            JP    Z,LEARN   ;  Yes do learn section
            CP    'E'       ;  Is it an 'E'
            JP    Z,EDIT    ;  Yes do edit
            CP    'R'       ;  Is it an 'R'
            JP    Z,READ    ;  Yes then do read command
            CP    'W'       ;  Is it a 'W'
            JP    Z,WRITE   ;  Yes do write command
            CP    'C'       ;  Is it a 'C'
            JP    Z,CHECK   ;  Yes do check routine
            CP    'S'       ;  Is it an 'S'
            JP    Z,SETAM   ;  Yes then do arm set
            CP    'T'       ;  a 'T'
            JP    Z,TOSTM   ;  Yes then move arm to start
            CP    'G'       ;  a 'G'
            JP    Z,GO      ;  Do execute movements stored
            CP    'D'       ;  a 'D'
            JP    Z,DISP    ;  Yes then display ARST array
            CP    'B'       ;  a 'B'
            JP    Z,BOOT    ;  Yes then restart system
            CP    'M'       ;  an 'M'
            JP    Z,MANU    ;  Yes the Manual control of arm
            CP    'F'       ;  a 'F'
            JP    Z,FREARM  ;  Yes then clear all motors
            CP    'Q'       ;  a 'Q'
            JP    Z,FINSH   ;  Yes then quit program
            LD    HL,QMESS  ;  Point to 'PARDON' message
            CALL  PSTR      ;  Print it
            JP    QUES1     ;  Try for next command
```

THE LEARN ROUTINE

```
;  This section deals with the recording
;  of an arm sequence

LEARN       LD      HL,RELNS  ;  Point to learn message
            CALL    PSTR      ;  Print the message
            CALL    GCHRA     ;  Get response and print it
            CALL    PNEWL     ;  Print a new line
            CP      '.'       ;  Response a '.'
            JP      Z,QUES1   ;  Back to main loop if user types a '.
            CP      'S'       ;  Response an 'S'
            JR      Z,WAIT1   ;  Learn sequence from start
            CP      'C'       ;  a 'C'
            JR      Z,NOINT   ;  Continue learning from end of
                              ;  sequence
            CALL    PNEWL     ;  output a new line
            JR      LEARN     ;  Bad answer so try again
WAIT1       CALL    MOVTO     ;  Move arm to start position
            CALL    INIT      ;  Clear variables
WAIT2       LD      HL,CASRD  ;  Point to waiting message
            CALL    PSTR      ;  Print it
            CALL    GCHRA     ;  Get response and print it
            CALL    PNEWL     ;  Print new line character
            CP      '.'       ;  Response a '.'
            JPZ     QUES1     ;  Exit to main loop if so
            CP      SPAC      ;  Is it a space?
            JR      NZ,WAIT2  ;  If not then bad input, try again
            CALL    TORQUE    ;  Switch motors on
            JR      STLRN     ;  Do rest of learn
NOINT       LD      HL,(COUNT);  Get current count
            LD      A,L       ;
            OR      H         ;  Is it zero?
            JPZ     Z,NOSTR   ;  Yes then can't add to nothing
STLRN       XOR     A         ;  Clear manual flag
            LD      (MAN),A   ;  Because we are in learn mode
CONLN       CALL    KEYIN     ;  Drive motors and store sequence
            OR      A         ;  Zero key pressed
            JR      NZ,CONLN  ;  No then continue
            CALL    MOVTO     ;  Move arm to start position
            JP      QUES1     ;  Back to main loop
```

EDIT FUNCTION

```
EDIT    LD      HL,(COUNT)    ;  Get row count
        LD      A,L           ;
        OR      H             ;  Test for zero
        JP      Z,NOSTR       ;  Yes then nothing in store
EDSRT   LD      HL,ECOMS      ;  Print edit message
        CALL    PSTR          ;
        CALL    GCHRA         ;  Get response
        CALL    PNEWL         ;  Print a new line
        CP      'M'           ;  Is response an 'M'
        JR      Z,EDMOT       ;  Yes then edit motor
        CP      'R'           ;  Is response an 'R'
        JR      NZ,EDSRT      ;  No then try again
        LD      HL,COUTS      ;  HL = New row count message
        CALL    PSTR          ;  Print it
        CALL    GINT          ;  Get 16 bit signed integer
        JP      NZ,BADC       ;  Non zero return means bad input
        LD      A,H           ;  Test top bit of HC
        BIT     7,A           ;
        JP      NZ,BADC       ;  If negative then bad input
        LD      BC,(COUNT)    ;  Get count value
        PUSH    HL            ;  Save response
        OR      A             ;  Clear carry flag
        SBC     HL,BC         ;  See if response < current count
        POP     HL            ;  Restore response
        JR      NC,BADC       ;
        LD      (COUNT),HL    ;  Replace count with response
        JP      QUES1         ;  Back to main loop
EDMOT   LD      HL,EDSTR      ;
        CALL    PSTR          ;  Print 'row number'
        CALL    GINT          ;  Get integer response
        JR      NZ,BADC       ;  Bad answer
        LD      A,H           ;
        BIT     7,A           ;  No negative row count
        JR      NZ,BADC       ;  allowed
        LD      A,H           ;
        OR      L             ;  or zero row count
        JR      Z,BADC        ;
        LD      BC,(COUNT)    ;  Get row count into BC
        INC     BC            ;  Move count up one
        PUSH    HL            ;  Clear carry flag
        SBC     HL,BC         ;  Subtract count from response
        POP     HL            ;  Restore response
        JR      NC,BADC       ;  If greater than allowed error
EDOK    DEC     HL            ;  Move response down one
        ADD     HL,HL         ;  Double HL
        PUSH    HL            ;  Save it
        ADD     HL,HL         ;  Row count x 4
        POP     BC            ;  BC = row count x 2
```

```
        ADD     HL,BC       ;  HL = Row count x 6
        LD      BC,ARST     ;  Get store start address
        ADD     HL,BC       ;  Add row offset
        PUSH    HL          ;  Save resulting pointer
        LD      HL,MOTNS    ;  Print
        CALL    PSTR        ;  Motor number string
        CALL    GINT        ;  Get Answer
        JR      NZ,BADNM    ;  Bad answer
        LD      A,H         ;
        OR      A           ;
        JR      NZ,BADNM    ;  Response too large
        LD      A,L         ;
        CP      1           ;
        JR      C,BADUM     ;  No motor number < 1   *  BADNM
        CP      7           ;
        JR      NC,BADNM    ;  No motor number > 6
        POP     HL          ;  Restore = Memory pointer
        DEC     A           ;  Motor offset Ø → 5
        LD      C,A         ;
        LD      B,Ø         ;  Add to memory pointer
        ADD     HL,BC       ;  Now we point to motor in store
        PUSH    HL          ;  Save pointer
        LD      HL,NVALS    ;
        CALL    PSTR        ;  Print new step value
        CALL    GINT        ;  Get response
        JR      NZ,BADNM    ;  Bad answer
        LD      A,H         ;
        CP      ØFFH        ;
        JR      NZ,PEDIT    ;  We have a positive response
        BIT     7,L         ;  New negative step value too
        JR      Z,BADNM     ;  large
        JR      MOTAS       ;  Step value OK
PEDIT   OR      A           ;  New positive step value too
        JR      NZ,BADNM    ;  large
        BIT     7,L         ;  so exit
        JR      NZ,BADNM    ;  else  ok
MOTAS   LD      A,L         ;  Get step value
        POP     HL          ;  Restore memory pointer
        LD      (HL),A      ;  Place step value in store
        JP      QUES1       ;  Go do next operation
BADNM   POP     HL          ;
BADC    LD      HL,BADMS    ;  Print error message and
        CALL    PSTR        ;
        JP      QUES1       ;  return to main loop
```

READ ROUTINE

```
;  Reads stored sequence from cassette
;  into memory

READ    LD      HL,CASRD    ;  Point to wait message
        CALL    PSTR        ;  Print it
        CALL    GCHRA       ;  Get response
        CALL    PNEWL       ;  Print new line
        CP      '.'         ;  Is response a dot?
        JP      Z,QUES1     ;  Yes then exit
        CP      SPAC        ;  Is it a space?
        JR      NZ,READ     ;  No then try again
        XOR     A           ;  Clear A=Drive zero
        CALL    CASON       ;  Switch on drive zero
        CALL    DELS        ;  Short delay
        CALL    RDHDR       ;  Read header from tape
        CALL    READC       ;  Read first character
        LD      B,A         ;  Put in B
        CALL    READC       ;  Read second character
        LD      C,A         ;  Place in C
        OR      B           ;  BC now equals count
        JP      Z,NOSTR     ;  Count zero, so exit
        LD      (COUNT),BC  ;  Set count = read count
        LD      HL,ARST     ;  Point to start of store
ROWNR   PUSH    BC          ;  Same count
        LD      E,Ø         ;  E = Check sum for a row
        LD      B,6         ;  B = Column Count
RDBYT   CALL    READC       ;  Read a row element
        LD      (HL),A      ;  Store it
        ADD     A,E         ;  Add it to check sum
        LD      E,A         ;  Store in check sum
        INC     HL          ;  Inc memory pointer
        DJNZ    RDBYT       ;  Do next element
        POP     BC          ;  Restore row count
        CALL    READC       ;  Read check digit
        CP      E           ;  Same as calculated?
        JR      NZ,RDERR    ;  No then error
        DEC     BC          ;  Decrement row count
        LD      A,B         ;  See if row count
        OR      C           ;  is zero
        JR      NZ,ROWNR    ;  No then read next row
        CALL    CASOF       ;  Switch cassette off
        JP      TAPEF       ;  exit
RDERR   LD      HL,RDMSG    ;  Error message for tape
        CALL    PSTR        ;  Print it
        JP      QUES1       ;  Go to main loop
```

WRITE ROUTINE

```
;  Writes a stored sequence to tape

WRITE     LD      BC,(COUNT)    ;  Get row count
          LD      A,B           ;
          OR      C             ;
BADWI     JP      Z,NOSTR       ;  If zero exit
          LD      HL,CASRD      ;  print message
          CALL    PSTR          ;
          CALL    GCHRA         ;  Get answer
          CALL    PNEWL         ;  Print new line
          CP      '.'           ;  Is answer a dot
          JP      Z,QUES1       ;  Yes then exit
          CP      SPAC          ;  Is answer a space
          JR      NZ,BADWI      ;  No then try again
          XOR     A             ;  Clear drive number
          CALL    CASON         ;  Switch on drive zero
          CALL    DELT          ;  delay
          CALL    WRLDR         ;  Write Leader
          CALL    DELT          ;  delay
          LD      BC,(COUNT)    ;  Get count into BC
          LD      A,B           ;
          CALL    WRBYA         ;  Write higher byte
          LD      A,C           ;  Get lower byte of count into A
          CALL    DELT          ;  delay
          CALL    WRBYA         ;  Write lower byte
          LD      HL,ARST       ;  Point to start of sequence of store
ROWNW     PUSH    BC            ;  Save row count
          LD      E,Ø           ;  Clear check sum
          LD      B,6           ;  Six motor slots per row
WRBYT     LD      A,(HL)        ;  Get motor  slot N
          CALL    DELS          ;  delay
          CALL    WRBYA         ;  Write it
          CALL    DELS          ;  delay
          ADD     A,E           ;  add to check sum
          LD      E,A           ;
          INC     HL            ;  Inc memory pointer
          DJNZ    WRBYT         ;  Do for all six motors
          CALL    WRBYA         ;  Write check sum
          POP     BC            ;  Restore row count
          DEC     BC            ;  Decrement row count
          LD      A,B           ;
          OR      C             ;  Test if zero
          JR      NZ,ROWNW      ;  No then try again
          CALL    CASOF         ;  Switch cassette off
          JP      QUES1         ;  Back to main loop
```

CHECK ROUTINE

```
;   Checks tape with sequence in store

CHECK       LD      BC,(COUNT)      ;  Get row count
            LD      A,B             ;
            OR      C               ;
            JP      Z,NOSTR         ;  If zero exit
BADCI       LD      HL,CASRD        ;  Print wait message
            CALL    PSTR            ;
            CALL    GCHRA           ;  Get answer
            CALL    PNEWL           ;  Print new line
            CP      '.'             ;  Is response a '.'
            JP      Z,QUES1         ;  Yes then go to main loop
            CP      SPAC            ;  Is it a space
            JR      NZ,BADCI        ;  No then try again
            XOR     A               ;  Clear cassette number
            CALL    CASON           ;  Switch drive zero on
            CALL    RDHDR           ;  Read header from tape
            LD      BC,(COUNT)      ;  Get row count
            CALL    READC           ;  Read first section
            CP      B               ;  Same?
            JR      NZ,RDERR        ;  No then error
            CALL    READC           ;  Read lower byte of count
            CP      C               ;  Same?
            JR      NZ,RDERR        ;  No then error
            OR      B               ;  Zero count from tape
            JP      Z,NOSTR         ;  So exit
            LD      HL,ARST         ;  Point to start of memory
ROWNC       PUSH    BC              ;  Save count
            LD      E,Ø             ;  Check sum is zero
            LD      B,6             ;  Count is 6
CKBYT       CALL    READC           ;  Read a motor step element
            CP      (HL)            ;  Same as in store?
            JP      NZ,RDERR        ;  Not the same so error
            ADD     A,E             ;
            LD      E,A             ;  Add to check sum
            INC     HL              ;  Advance memory pointer
            DJNZ    CKBYT           ;  Do next row element
            POP     BC              ;  Restore row count
            CALL    READC           ;  Read check sum
            CP      E               ;  Same as check sum calculated
            JP      NZ,RDERR        ;  No then error
            DEC     BC              ;  Decrement count
            LD      A,B             ;
            OR      C               ;  Is count zero?
            JP      NZ,ROWNC        ;  No then do next row
            CALL    CASOF           ;  Switch cassette off
TAPEF       LD      HL,TAPOK        ;  Print tape off message
            CALL    PSTR            ;
            JP      QUES1           ;  and back to main loop
```

BOOT AND FINISH COMMANDS

```
;  This routine restarts the program

BOOT    LD      HL,BOOTS        ;  Print "DO YOU REALLY
        CALL    PSTR            ;  WANT TO RESTART?"
        CALL    GCHRA           ;  Get answer
        CP      'Y'             ;  User typed 'Y'?
        JP      Z,STARM         ;  Yes then restart program
        CP      'N'             ;  No 'N'?
        JR      NZ,BOOT         ;  Then try again
        CALL    PNEWL           ;  else print new line and
        JP      QUES1           ;  back to main loop

;  This is the exit from program Section to TRS80
;  system level

FINSH   LD      HL,RELYQ        ;  Print "REALLY QUIT"
        CALL    PSTR            ;
        CALL    GCHRA           ;  Get answer
        CP      'Y'             ;  User typed a 'Y'
        JR      NZ,TRYNO        ;  No then try 'N'
        LD      HL,SIGOF        ;  Print ending message
        CALL    PSTR            ;  and then
        JP      FINAD           ;  return to TRS80 System
TRYNO   CP      'N'             ;  User typed an 'N'
        JR      NZ,FINSH        ;  No then try again
        CALL    PNEWL           ;  Print a new line
        JP      QUES1           ;  Back to main loop
```

OTHER SHORT COMMANDS

```
;  SETAM  clears arm position array

SETAM     CALL    RESET    ;  Clear Arm array  (POSAR)
          JP      QUES1    ;  Back to main loop

;  TOSTM  moves the arm back to its start position

TOSTM     CALL    MOVTO    ;  Steps motors till POSAR elements
          JP      QUES1    ;  are zero then back to main loop

;  FREARM  frees all motors for user to move arm
;  by hand

FREARM    CALL    CLRMT    ;  Output all ones to motors
          JP      QUES1    ;  and now to main loop

;  MANU allows the user to move the arm using
;  the 1-6 keys and the 'Q' 'W' 'E' 'R' 'T' 'Y' keys
;  The movements made are not stored.

MANU      LD      A,1      ;  Set in manual mode for the
          LD      (MAN),A  ;  keyin routine
MANUA     CALL    KEYIN    ;  Now get keys and move motors
          JP      NZ,MANUA ;  If non zero then move to be done
          XOR     A        ;  Clear manual flag
          LD      (MAN),A  ;
          JP      QUES1    ;  Back to main loop
```

THE GO COMMAND

```
;  This command causes the computer to step
;  through a stored sequence and makes the arm
;  follow the steps stored, if the sequence is to
;  be done forever then the arm resets itself at
;  the end of each cycle.

GO      CALL    PNEWL       ;  Print a new line
        CALL    MOVTO       ;  Move arm to start
        XOR     A           ;  Clear
        LD      (FORFG),A   ;  Forever Flag FORFG
        LD      HL,AORNM    ;  Print "DO ONCE OR FOREVER (RORNM)
        CALL    PSTR        ;  Message
        CALL    GCHRA       ;  Get answer and print it
        CALL    PNEWL       ;  Print a new line
        CP      'O'         ;  User typed an 'O'
        JR      Z,ONECY     ;  Do sequence till end
        CP      'F'         ;  User typed an 'F'
        JR      NZ,GO       ;  No then re-try
        LD      A,1         ;  Set forever flag
        LD      (FORFG),A   ;  to 1
ONECY   LD      A,'.'       ;  Print a '.'
        CALL    PUTCHR      ;  Using PUTCHR
        CALL    DOALL       ;  Execute the sequence
        LD      A,(FORFG)   ;  Test FORFG, if zero
        OR      A           ;  then we do not want
        JR      Z,NORET     ;  to carry on so exit
        CALL    DELT        ;  delay
        CALL    MOVTO       ;  Move arm to start
        CALL    DELLN       ;  Delay approx 1 second
        JR      ONECY       ;  Do next sequence
NORET   LD      HL,DONMS    ;  Print sequence done
        CALL    PSTR        ;
        JP      QUES1       ;  and go to main loop
```

THE DISPLAY COMMAND

```
;  This command allows the user to display
;  the motor sequence so that he can then
;  alter the contents of a sequence by using
;  the edit command

DISP    LD      HL,DISPS    ;  Point to header string
        CALL    PSTR        ;  and display it
        CALL    POSDS       ;  Print out the relative position
        LD      HL,ARST     ;  Point to sequence start
        LD      BC,(COUNT)  ;  BC = how many rows to print
        LD      A,B         ;
        OR      C           ;  Test if count is zero
        JP      NZ,SETBC    ;  No then jump to rest of
NOSTR   LD      HL,NODIS    ;  display else print message
        CALL    PSTR        ;  telling user no display and
        JP      QUES1       ;  return to the main loop
SETBC   LD      EC,ØØØ      ;  Clear BC for row count
DOROW   PUSH    BC          ;  Save it
        PUSH    HL          ;  Save memory position
        LD      H,B         ;
        LD      L,C         ;  HL = row count
        INC     HL          ;  Now row count =N+1
        LD      IX,NUMAR    ;  IX  points to buffer for ASCII Strir
        CALL    CBTAS       ;  Convert HL to ASCII
        LD      HL,NUMAR    ;  Point to ASCII string
        CALL    PSTR        ;  now print it
        LD      A,'.'       ;
        CALL    PUTCHR      ;  Print a '.'
        POP     HL          ;  Restore memory pointer
        LD      B,6         ;  Motor count to B (6 motors)
NEXTE   LD      A,(HL)      ;  Get step value
        PUSH    HL          ;  Save memory pointer
        PUSH    BC          ;  Save motor count
        BIT     7,A         ;  Test bit 7 of A for sign
        JR      Z,NUMPO     ;  If bit = Ø then positive step
        LD      H,ØFFH      ;  Make H = negative number
        JR      EVAL        ;  Do rest
NUMPO   LD      H,Ø         ;  Clear H for positive number
EVAL    LD      L,A         ;  Get low order byte into L
        LD      IX,NUMAR    ;  Point to result string
        CALL    CBTAS       ;  Call conversion routine
        LD      HL,NUMAR    ;  HL points to result
        CALL    PSTR        ;  Print resulting conversion
        LD      A,(381ØH)   ;  Get keyboard memory location
        BIT     Ø,A         ;  Test for zero key pressed
        JR      Z,NOSTP     ;  Not pressed, then skip
DOSTP   CALL    GCHR        ;  Wait till next character entered
        CP      '.'         ;  Is it a dot?
        JR      NZ,NOSTP    ;  No then carry on
        CALL    PNEWL       ;  else print a new line
        POP     BC          ;  and restore all the registers
        POP     HL          ;  and the stack level
```

```
        POP     BC          ;
        JP      QUES1       ; Jump back to main loop
NOSTP   POP     BC          ; Restore column count
        POP     HL          ; Restore memory pointer
        INC     HL          ; Increment memory pointer
        CALL    PSPAC       ; Print a space between
                            ; numbers
        DJNZ    NEXTE       ; Do for six motors
        CALL    PNEWL       ; Print a new line
        POP     BC          ; Restore row count
        INC     BC          ; Increment row count
        LD      A,(COUNT)   ; Get lower count byte
        CP      C           ; Is it the same
        JR      NZ,DOROW    ; No then do next row
        LD      A,(COUNT+1) ; Get higher order count byte
        CP      B           ; Same?
        JR      NZ,DOROW    ; No then do next row else
        CALL    PNEWL       ; print a new line and then
        JP      QUES1       ; back to main loop
```

SECTION 3

SUBROUTINES.

SUBROUTINES INDEX

DOALL.....4-26.....Execute a stored sequence once

DRIVL.....4-27.....Drives all motors directed by TBUF

INIT.....4-28.....Set up system

MOVTO.....4-28a.....Use POSAR to rest system arm

TORQUE.....4-29.....Turn on off motors

CLRMT.....4-29.....Turn off all motors

SETDT.....4-30.....Reset CTPOS elements to one

DRAMT.....4-31.....Drive directed motors

STEPM.....4-32.....Step motors via DRAMT

DNEWD.....4-33.....Delay on direction change

SRAMT.....4-34.....Update TBUF array during learn

KEYIN.....4-35.....Scan keyboard and build up motors to move

CBTAS.....4-37.....Convert 16 bit 2's complement number to ASC

CLRMF.....4-39.....Clear MOTBF array

CTBUF.....4-39.....Clear TBUF, DRBUF & MOTBF arrays

GINT.....4-40.....Get 16 bit signed value from keyboard

POSDS.....4-42.....Display relative position array elements

POSIC.....4-43.....Increment relative position array elements

STORE.....4-44.....Copy TBUF to current ARST slice

RESET.....4-45.....Clear POSAR array

PUTCHR.....4-46.....Print a character

PSTR.....4-46.....Print a string

PSPAC.....4-46.....Print a space

PNEWL.....4-46.....Print a carriage return

SUBROUTINES INDEX (continued)

SCKBD.....4-46.....Scan the keyboard

GCHRA.....4-46.....Get a character and print it

CLRSC.....4-47.....Clear the Screen

DELSW.....4-48.....Delay on value in B

DELS.....4-48.....Delay approx Ø.ØØ1 sec

DELT.....4-48.....Delay approx Ø. Ø1 sec

DELLN.....4-48.....Dealy approx 1. Ø sec

SUBROUTINE DOALL

```
;  This subroutine executes a sequence in store once.
;  Forever flag FORFG is cleared if user types a '.'

DOALL     LD      BC,(COUNT)     ;  Get sequence row count
          LD      A,B            ;
          OR      C              ;  If count zero then
          JR      Z,RET2         ;  exit
          LD      HL,ARST        ;  HL points to memory start
NMOTS     LD      DE,TBUF        ;  DE points to temporary buffer
          PUSH    BC             ;  Save count
          LD      BC,ØØØ6        ;  Motor count of six
          LDIR                   ;  Copy memory slice into TBUF
          PUSH    HL             ;  Save new memory pointer
          CALL    DRIVL          ;  Drive all motors for this slice
          CALL    SCKBD          ;  See if keyboard input
          POP     HL             ;  Restore memory pointer
          POP     BC             ;  Restore row count
          CALL    DNEWD          ;
          CP      '.'            ;  User typed a '.'
          JR      NZ,CARON       ;  No then continue
RET2      XOR     A              ;  Clear A
          LD      (FORFG),A      ;  Clear flag to halt routine above
          RET                    ;  exit
CARON     DEC     BC             ;  Decrement count
          LD      A,B            ;
          OR      C              ;  Test for zero
          JR      NZ,NMOTS       ;  No then carry on else
          RET                    ;  return
```

SUBROUTINE DRIVL

```
;  This routine is given TBUF, it then drives all
;  the motors that need to be driven, till TBUF = Ø

DRIVL       LD      C,Ø             ;
SCANW       LD      B,6             ;  Set BC = motor count
            LD      HL,TBUF         ;  Point to TBUF
TBZER       LD      A,(HL)          ;  Get step value from TBUF
            OR      A               ;  Is it zero?
            JR      NZ,TBNZR        ;  No then continue
            INC     HL              ;  Point to next TBUF location
            DJNZ    TBZER           ;  Do next motor check
            RET                     ;  If no motor to step, then ret
TBNZR       LD      DE,MOTBF + 5    ;  DE points to last direction a
            LD      HL,TBUF + 5     ;  HL points to TBUF
            LD      B,6             ;  B = motor count
DOAGN       LD      A,(HL)          ;  Get motor step value
            CP      Ø               ;  Is it zero?
            JR      Z,NOEL          ;  Yes then skip
            JP      M,SNEG          ;  Is it negative ie, reverse
SPOS        LD      A,3             ;  No positive, so load MOTBF (N
            LD      (DE),A          ;  With 3
            DEC     (HL)            ;  Decrement motor count in TBUF
            JR      NOFIL           ;  Complete the MOTBF array
SNEG        LD      A,1             ;  Set MOTBF = 1 for
            LD      (DE),A          ;  a positive drive
            INC     (HL)            ;  Decrement negative count
            JR      NOFIL           ;  Do rest of MOTBF
NOEL        XOR     A               ;  Clear MOTBF (N)
            LD      (DE),A          ;
NOFIL       DEC     DE              ;  Move to next MOTBF element
            DEC     HL              ;  Move to next TBUF element
            DJNZ    DOAGN           ;  Do for all six motors
            LD      A,1             ;
            LD      (KEYP),A        ;  Set key pressed flag
            CALL    STEPM           ;  Step all motors once if
            DEC     C               ;  any to step
            JP      NZ,SCANW        ;  Do for maximum of 128 cycles
            RET                     ;  then return
```

SUBROUTINE INIT

```
;  INIT clears the row count (COUNT), resets the
;  MAN flag, clears the TBUF, DRBUF, & MOTBF arrays
;  The CUROW pointer is reset  to the start of the ARST,
;  position array is cleared.

INIT    LD      HL,Ø            ;  Set HL = Ø
        LD      (COUNT),HL      ;  and clear the  row count
        XOR     A               ;  Clear A
        LD      (MAN),A         ;  Now clear MAN
        LD      HL,ARST         ;  HL  =  start of arm store
        LD      (CURCW),HL      ;  CUROW = start of arm store
        CALL    CTBUF           ;  Clear TBUF, DRBUF & MOTBF
        CALL    RESET           ;  Clear the POSAR array
        CALL    CLFMT           ;  Free all motors
        RET                     ;  EXIT
```

SUBROUTINE MOVTO

```
;  This routine takes the POSAR array and uses it to drive
;  all the motors until the ARM is in its defined start position

MOVTO   PUSH    AF          ;  *
        PUSH    BC          ;  *
        PUSH    DE          ;  *  Save registers
        PUSH    HL          ;  *
        LD      HL,POSAR    ;  HL points to POSAR
RES1    LD      B,12        ;  B = count of 12
NRES1   LD      A,(HL)      ;  Get POSAR element
        OR      A           ;  Is it zero?
        JR      NZ,MTSA     ;  No then continue
        INC     HL          ;  Point to next POSAR element
        DJNZ    NRES1       ;  See if all zero
        JR      ENDSC       ;  All zero so end!
MTSA    LD      HL,POSAR+1Ø ;  HL points to POSAR
        LD      DE,MOTBF+ 5 ;  DE points to MOTBF
        LD      B,6         ;  B  = count
RSCAN   PUSH    BC          ;  Save count
        LD      C,(HL)      ;  Get lower byte
        INC     HL          ;  Advance HL pointer
        LD      B,(HL)      ;  Get high byte of POSAR elemer
        LD      A,C         ;  Get low byte into A
        OR      B           ;  See if POSAR(N) is zero
        JR      NZ,DOMPL    ;  no skip
        LD      (DE),A      ;  Zero MOTBF (N)
        DEC     HL          ;  advance POSAR pointer
        JR      NMDR        ;  Do next motor
DOMPL   LD      A,B         ;  See direction to move in
        BIT     7,A         ;
        JR      Z,RMOT1     ;  Go in reverse
        INC     BC          ;  Go  forward
        LD      A,1         ;  A = forward
        JR      DOIT1       ;  Do rest
RMOT1   DEC     BC          ;  Dec count for reverse
        LD      A,3         ;  Set reverse in A
DOIT1   LD      (DE),A      ;  Store reverse in MOTBF (N)
        LD      (HL),B      ;  Store updated POSAR count
        DEC     HL          ;  in POSAR (N)
        LD      (HL),C      ;  Store lower byte
        DEC     HL          ;
NMDR    DEC     HL          ;  point to next POSAR element
        DEC     DE          ;  Move to next MOTBF element
        POP     BC          ;  Restore motor count
        DJNZ    RSCAN       ;  Do for next motor
        CALL    DRAMT       ;  Drive all motors to be driv
        JR      RES1        ;  Do till all POSAR slots zer
ENDSC   POP     HL          ;  *
        POP     DE          ;  *
        POP     BC          ;  *  Restore all registers
        POP     AF          ;  *
        RET                 ;  Return
```

SUBROUTINES TORQUE, CLRMT AND SETDT

```
;  TORQUE switches  of motors on and sets CTPOS(N)'s
;  CLRMT  turns all motors off and sets CTPOS(1-6)
;  SETDT  sets all CTPOS elements to start offset
;  position which equals 1.


TORQUE    PUSH    AF          ;  *  Set clear motor-
          PUSH    BC          ;  *
          PUSH    DE          ;  *  Save Registers
          PUSH    HL          ;  *
          LD      HL,TORMS    ;  Print TORQUE ON message
          CALL    PSTR        ;
          LD      DE,CTPOS    ;  Point to FTABL offset array
          LD      HL,MOTBF    ;  Point to last drive table
          LD      B,6         ;  B = motor count
TORQ1     LD      A,(HL)      ;  Get motor value
          OR      A           ;  Is it zero?
          JR      NZ,TORQ2    ;  No then skip
          LD      A,1         ;  Reset CTPOS(N) to position 1
          LD      (DE),A      ;  in FTABL
          LD      A,B         ;  Get motor address in A
          SLA     A           ;  Shift it left for interface defn
          OR      192         ;  or in FTABL pulse
          OUT     (PORT),A    ;  Output it to selected motor
TORQ2     INC     DE          ;  Advance points to next
          INC     HL          ;  motors
          DJNZ    TORQ1       ;  Do next motor
          JR      TOQCL       ;  Exit with register restoration
CLRMT     PUSH    AF          ;  *  clear all motors torque
          PUSH    BC          ;  *
          PUSH    DE          ;  *  Save Registers
          PUSH    HL          ;  *
          LD      HL,NOTOR    ;  Print "NO TORQUE" message
          CALL    PSTR        ;
          LD      D,ØFØH      ;  Pattern for motors off
OTMT      LD      B,6         ;  B  = Motor count
CLMT      LD      A,B         ;  Get motor address in A
          SLA     A           ;  Shift into correct bit position
          OR      D           ;  Combine with coils off pattern
          OUT     (PORT),A    ;  Output to selected motor
          DJNZ    CLMT        ;  Do next motor
          CALL    SETDT       ;  Clear CTPOS array to value of 1
TOQCL     POP     HL          ;  *
          POP     DE          ;  *
          POP     BC          ;  *  Restore Registers
          POP     AF          ;  *
          RET                 ;  Done, exit
```

```
SETDT   PUSH    BC          ;  *  Set CTPOS elements to start
        PUSH    DE          ;  *  Save used registers
        PUSH    HL          ;  *
        LD      B,6         ;  Motor count to B
        LD      HL,CTPOS    ;  HL points to CTPCS array
NSET1   LD      (HL),1      ;  Set CTPOS(N) to start position
        INC     HL          ;  Increment HL
        DJNZ    NSET1       ;  Do set up next CTPCS element
        POP     HL          ;  *
        POP     DE          ;  *  Restore used registers
        POP     BC          ;  *
        RET                 ;
```

SUBROUTINE DRAMT

```
;  DRAMT drives all six motors directly and uses
;  FTABL to output the correct pulse patterns.
;  For half stepping the pattern must be changed in FTABL
;  and the bounds in DRAMT

DRAMT   PUSH    AF              ;  *
        PUSH    BC              ;  *
        PUSH    DE              ;  *  Save Registers
        PUSH    HL              ;  *
        LD      B,6             ;  B = motor count.
        LD      DE,MOTBF +5     ;  Point  to MOTBF array
        LD      HL,CTPOS        ;  HL points to FTABL offset array
NMTDT   LD      A,(DE)          ;  Get MOTBF(N)
        OR      A               ;  Is it zero?
        JR      Z,IGMTN         ;  If zero, then skip
        BIT     1,A             ;  Test direction
        CALL    OUTAM           ;  Step motor
        JR      Z,REVMT         ;  If direction negative then jump
        INC     A               ;  Increment table counter
        CP      5               ;  Upper bound?
        JR      C,NORST         ;  No then continue
        LD      A,1             ;  Reset table offset
NORST   LD      (HL),A          ;  Store in CTPOS (N)
IGMTN   INC     HL              ;  Increment CTPOS pointer
        DEC     DE              ;  Decrement MOTBF pointer
        DJNZ    NMTDT           ;  Do for next motor
        CALL    DELT            ;  Delay after all pulses out
        CALL    DELS            ;  *
        POP     HL              ;  *
        POP     DE              ;  *
        POP     BC              ;  *  Restore Registers
        POP     AF              ;  *
        RET                     ;  Exit
REVMT   DEC     A               ;  Move table pointer on
        CP      1               ;  Compare with lower bound
        JR      NC,NORST        ;  If no overflow then continue
        LD      A,4             ;  Reset table offset
        JR      NORST           ;  Do next motor
OUTAM   LD      A,(HL)          ;  Get table offset 1-4
        PUSH    AF              ;  *
        PUSH    DE              ;  *  Save Registers
        PUSH    HL              ;  *
        LD      HL,FTABL-1      ;  Get table start
        LD      D,Ø             ;
        LD      E,A             ;  DE now equals 1-4
        ADD     HL,DE           ;  Add to FTABL -1 to get address
        LD      A,(HL)          ;  Get motor pulse pattern
        LD      C,B             ;  Get address field in C and
        SLA     C               ;  shift it one to the left
        OR      C               ;  or in the pulse pattern
        OUT     (PORT),A        ;  Output to interface circuitry
        POP     HL              ;  *
        POP     DE              ;  *  Restore Registers
        POP     AF              ;  *
        RET                     ;  Return
```

SUBROUTINE STEPM

```
;  This routine causes all motors that should be
;  stepped to be so, and updates the motors relative
;  positions from their start positions.

STEPM    PUSH   AF          ;  *
         PUSH   HL          ;  *  Save Register
         PUSH   BC          ;  *
         LD     HL,MOTBF    ;  HL points to motor buffer
         LD     B,6         ;  B  =  Count
TRYØ     LD     A,(HL)      ;  Get motor value 3 or 1
         OR     A           ;  Zero?
         JR     NZ,CONTA    ;  No then continue
CONT     INC    HL          ;  Point to next motor
         DJNZ   TRYØ        ;  Do next motor
         POP    BC          ;  *
         POP    HL          ;  *  Restore Registers
         POP    AF          ;  *
         RET                ;  Exit
CONTA    POP    BC          ;  *
         POP    HL          ;  *  Restore registers
         CALL   DRAMT       ;  Drive motors
         CALL   POSIC       ;  Increment relative position
         POP    AF          ;  *  Restore AF
         RET                ;  Exit
```

```
SUBROUTINE  DNEWD
;    This subroutine checks to see if any motors are
;    changing direction , if so a delay is inserted
;    into the sequence.


DNEWD   PUSH   AF          ; *
        PUSH   BC          ; *
        PUSH   DE          ; * save used registers
        PUSH   HL          ; *
        LD     BC,6        ; Load BC with count
        OR     A           ; Clear carry
        SBC    HL,BC       ; HL points to previous motor slice
        LD     D,H         ;
        LD     E,L         ; Move HL to DE
        POP    HL          ; Restore current row pointer
        PUSH   HL          ; Save again
        LD     B,C         ;
NCOMP   LD     A,(HL)      ; Get contents of this row
        CP     Ø           ; See if positive or negative
        LD     A,(DE)      ; Get identical previous motor slot
        JP     P,PDIR      ; if positive do for positive motor
NDIR    CP     Ø           ; Compare if both in same
        JP     M,NXTCK     ; direction then skip else
CDDEL   CALL   DELLN       ; delay  and
NCDSG   POP    HL          ; *
        POP    DE          ; *
        POP    BC          ; * Restore registers
        POP    AF          ; *
        RET                ; Now return
PDIR    CP     Ø           ; If previous motor is negative
        JP     P,NXTCK     ; then delay, else do for next
        JR     CDDEL       ; motor slot
NXTCK   INC    HL          ; increment current row pointer
        INC    DE          ; increment lost row pointer
        DJNZ   NCOMP       ; do for next motor
        JR     NCDSG       ; Return with no large (1 sec) delay
```

SUBROUTINE SRAMT

```
;  SRAMT is responsible for updating the TBUF
;  elements and for setting the STRFG if a situation
;  exists where the TBUF array should be stored in the
;  current ARST slot.  This will occur if any motor changes
;  direction or a motor exceeds the allowed slct
;  boundary of -128 to 127.

SRAMT       LD      A,(MAN)       ;  Get manual flag
            OR      A             ;  Is it zero?
            JP      NZ,STEPM      ;  Yes then just step motors
            LD      (STRFG),A     ;  Clear the store flag
            LD      B,6           ;  B  =  motor count
            LD      IX,DRBUF+6    ;  IX = previous direction buffer
            LD      IY,MOTBF+6    ;  IY = current buffer
            LD      HL,TBUF +6    ;  HL = step buffer
NTMOT       DEC     IY            ;
            DEC     IX            ;
            DEC     HL            ;  move pointers
            LD      A,(IY +Ø)     ;  Get current motor direction
            OR      A             ;  No work to do
            JR      Z,NODRV       ;  skip, if so
            CP      1             ;  Reverse
            JR      Z,REVDR       ;  Yes then skip
FORDR       LD      A,(IX+Ø)      ;  Get previous direction
            CP      1             ;  Direction change?
            JR      NZ,CFORD      ;  No then advance TBUF(N) step
            CALL    SETST         ;  Set the store flag
            LD      (IY+Ø) ,Ø     ;  Clear MOTBF element.
            JR      NODRV         ;  Do next motor
CFORD       INC     (HL)          ;  Increment motor step in TBUF
            LD      A,(HL)        ;  Get new value
            CP      127           ;  Check against upper board
            CALL    Z,SETST       ;  Limit reached then store flag
            LD      (IX+Ø),3      ;  Set previous direction
NODRV       DJNZ    NTMOT         ;  Do next motor
            CALL    STEPM         ;  Step motors to be driven
            LD      A,(STRFG)     ;  Examine store flag
            OR      A             ;  Zero?
            JP      NZ,STORE      ;  No then do store operation
            RET                   ;  Exit
REVDR       LD      A,(IX+Ø)      ;  Get previous direction
            CP      3             ;  Direction reversed?
            JR      NZ,CREV1      ;  No then continue
            CALL    SETST         ;  Else set store TBUF in ARST fl
            LD      (IY+Ø),Ø      ;  clear MOTBF element
            JR      NODRV         ;  Do next motor
CREV1       DEC     (HL)          ;  Advance step count in TBUF (N)
            LD      A,(HL)        ;  Get element
            CP      -128          ;  Compare with upper negative bo
            CALL    Z,SETST       ;  Limit reached so set store fla
CREVD       LD      (IX+Ø),1      ;  Set Direction
            JR      NODRV         ;  Do next motor
SETST       PUSH    AF            ;  Save AF
            LD      A,1           ;  Set store flag STRFG
SETSC:      LD      (STRFG),A     ;  to one
            POP     AF            ;  Restore AF
            RET                   ;  Continue
```

SUBROUTINE KEYIN

```
;  This routine scans the keyboard checking for
;  the keys '1-6' and 'Q''W''E''R''T''Y' and 'S'
;  and Ø.  It then drives the motors corresponding
;  to the keys pressed.  If in learn mode the
;  sequence is stored.

KEYIN    CALL    CLRMF     ;  Clear MOTBF array
         LD      A,(384ØH) ;  Get TRS8Ø keyboard byte
         BIT     7,A       ;  See if
         JR      Z,IGDEL   ;  No space key so skip
         CALL    DELT      ;  *
         CALL    DELT      ;  *  Slow motor driving
IGDEL    XOR     A         ;  Clear KEY PRESSED flag
         LD      (KEYP),A  ;
         LD      A,(381ØH) ;
         BIT     Ø,A       ;  Is the zero key pressed?
         JR      Z,TRYS    ;  No then skip
         JP      NOTNG     ;  Go to do nothing
TRYS     LD      A,(38Ø4H) ;  See if
         BIT     3,A       ;  'S'  key pressed
         LD      A,(381ØH) ;  Restore memory value
         JR      Z,TRYN1   ;  No then skip
         LD      A,(MAN)   ;  See if in manual mode
         CP      A         ;
         CALL    Z,STORE   ;  No then store TBUF
         OR      1         ;  Set not finished flag
         RET               ;  and exit to caller
TRYN1    LD      BC,Ø      ;  Clear MOTBF offset in BC
         BIT     1,A       ;  See if '1' key is pressed
         JP      Z,TRYN2   ;  No then skip else
         CALL    FORMT     ;  Set up motor 1 position in MOTBF
TRYN2    INC     BC        ;  Increment MOTBF offset
         BIT     2,A       ;  See if '2' key pressed
         JP      Z,TRYN3   ;  No skip
         CALL    FORMT     ;  Set second motor forward
TRYN3    INC     BC        ;  Advance offset
         BIT     3,A       ;
         JP      Z,TRYN4   ;  See if '3' key pressed, No skip
         CALL    FORMT     ;  Set forward direction on Motor 3
TRYN4    INC     BC        ;  Increment offset in BC
         BIT     4,A       ;  See if key '4' is pressed
         JP      Z,TRYN5   ;  No then test key '5'
         CALL    FORMT     ;  Do forward direction for Motor 4
TRYN5    INC     BC        ;  Advance offset
         BIT     5,A       ;  Key '5' pressed
         JP      Z,TRYN6   ;  No skip
         CALL    FORMT     ;  Do set up for motor 5
TRYN6    INC     BC        ;  Advance offset
         BIT     6,A       ;  Key '6' pressed
         JP      Z,TRYQT   ;  No then try 'Q'
         CALL    FORMT     ;  Do for motor 6
```

8/4/83

```
TRYQT   LD      BC,Ø        ;  Clear BC offset for moto:
        LD      A,(38Ø4H)   ;  See if 'Q' key pressed
TRYQ    BIT     1,A         ;
        JP      Z,TRYW      ;  No then skip
        CALL    BACMT       ;  Set motor 1 for backward
TRYW    INC     BC          ;  Advance pointer
        BIT     7,A         ;  See if 'W' key pressed
        JP      Z,TYRE      ;  No skip (TRYE)
        CALL    BACMT       ;  Do backward for motor 2
TRYE    INC     BC          ;  Advance pointer offset
        LD      A,(38Ø1H)   ;  See if
        BIT     5,A         ;  'E' key pressed
        JR      Z,TRYR      ;  No skip
        CALL    BACMT       ;  Set motor 3 for backward
TRYR    INC     BC          ;  Advance pointer offset
        LD      A,(38Ø4H)   ;  See if
        BIT     2,A         ;  Key 'R' is pressed
        JR      TRYT        ;  No skip  JR Z,TRYT
        CALL    BACMT       ;  Set motor 4 backward
TRYT    INC     BC          ;  Advance offset
        BIT     4,A         ;  Is key 'T' pressed?
        JP      Z,TRYY      ;  No skip
        CALL    BACMT       ;  Set motor 5 backward
TRYY    LD      A,(38Ø8H)   ;  Is the 'Y' key pressed?
        INC     BC          ;  Avance offset
        BIT     1,A         ;  No key
        JP      Z,SOMEN     ;  'Y' then skip
        CALL    BACMT       ;  Set motor 6 for backward
SOMEN   CALL    SRAMT       ;  Step motors, maybe store.
        OR      1           ;  Set zero key not pressed f
        RET                 ;  Return to caller
NOTNG   LD      A,(MAN)     ;  Zero was pressed so see
        OR      A           ;  if in learn mode
        CALL    Z,STORE     ;  Yes then store
        XOR     A           ;  Set zero flag and
        RET                 ;  Return to caller
FORMT   LD      E,3         ;  Set for forward direction
        JR      SETMT       ;  Do set motor slot in MOTBF
BACMT   LD      E,1         ;  Set for reverse direction
SETMT   LD      HL,MOTBF    ;  Point to MOTBF
        ADD     HL,BC       ;  Add in motor offset
        PUSH    AF          ;  Save AF
        LD      A,(HL)      ;  Get byte
        OR      A           ;  See if zero
        JR      Z,DOMOT     ;  Yes then set byte
        XOR     A           ;  Clear
        LD      (HL),A      ;  byte in MOTBF user wants bc
        POP     AF          ;  directions clear byte
        RET                 ;  Restore AF and return
DOMOT   LD      (HL),E      ;  Set byte in MOTBF
        LD      A,1         ;  and set
        LD      (KEYP),A    ;  key pressed flag
        POP     AF          ;  Restore AF
        RET                 ;  exit from routine
```

SUBROUTINE CBTAS

```
;  This subroutine makes a signed binary value in
;  HL  into arm ASCII String and stcres the string
;  in the lccations pointed tc by lX

CBTAS     PUSH    AF          ;  *
          PUSH    HL          ;  *
          PUSH    DE          ;  *  Save Registers
          PUSH    lX          ;  *
          BIT     7,H         ;  Test sign of number
          JR      Z,POSNO     ;  If zero then positive number
          LD      A,H         ;
          CPL                 ;  Complement number if negative
          LD      H,A         ;
          LD      A,L         ;
          CPL                 ;
          LD      L,A         ;
          INC     HL          ;  Now 2's complement negative
          LD      A,MINUS     ;  Place minus sign in string
PUTSN     LD      (IX+Ø),A    ;  Pointed to by lX
          INC     IX          ;  Advance lX pointer
          JR      CONUM       ;  Do rest cf conversion
POSNO     LD      A,SPAC      ;  Place a space if number positive
          JR      PUTSN       ;  Jump to copy space to memory
CONUM     PUSH    IY          ;  Save lY register
          LD      IY,BTOAT    ;  Point to subtraction table
NUMLP     LD      A,NUMBA     ;  Get ASCII Ø in A
          LD      E,(lY+Ø)    ;
          LD      D,(lY+l)    ;  Get table value
SUBBA     OR      A           ;  Clear carry bit
          SBC     HL,DE       ;  Subtract table value from value
                              ;  input
          JP      C,GONEN     ;  If carry then do for next digit
          INC     A           ;  Inc count (ASCII in A)
          JR      SUBBA       ;  Do next subtracticn
GONEN     ADD     HL,DE       ;  Restore value before last
                              ;  subtraction
          LD      (lX+Ø),A    ;  Store ASCII Number in memory
          INC     lX          ;  Inc memory pointer
          INC     lY          ;  Point to next table value
          INC     lY          ;
          DEC     E           ;  Test if E = Ø
          JR      NZ,NUMLP    ;  No then try for next digit
          XOR     A           ;  Clear A and place in store
          LD      (lX+Ø),A    ;  as EOS = End of string
          POP     IY          ;  *
          POP     IX          ;  *
          POP     DE          ;  *  Restore all saved registers
          POP     HL          ;  *  and
          POP     AF          ;  *
          RET                 ;  Exit
```

```
BTOAT   DEFW    1ØØØØ   ;  Table of subtraction constants
        DEFW    1ØØØ    ;  for conversion routine
        DEFW    1ØØ     ;
        DEFW    1Ø
        DEFW    1
```

CLEARING AND RESETTING ROUTINES

```
;  CLRMF  clears the MOTBF array

CLRMF     PUSH     BC            ;  *
          PUSH     DE            ;  *  Save Registers used
          POP      HL            ;  *
          LD       HL,MOTBF      ;  Point to MOTBF(Ø)
          LD       DE,MOTBF +1   ;  Point to MOTBF(1)
          LD       BC,5          ;  BC = Count
          LD       (HL),Ø        ;  MOTBF (Ø) = Ø
          LDIR                   ;  Copy through complete array
          POP      HL            ;  *
          POP      DE            ;  *  Restore Registers used
          POP      BC            ;  *
          RET                    ;  Exit

;  CTBUF clears TBUF, DRBUF and MOTBF
;  Note all must be in order

CTBUF     PUSH     BC            ;  *
          PUSH     DE            ;  *  Save Registers
          PUSH     HL            ;  *
          LD       HL,TBUF       ;  HL points to TBUF(Ø)
          LD       DE,TBUF + 1   ;  DE points to TBUF(1)
          LD       BC,17         ;  BC = Count of 17
          LD       (HL),Ø        ;  Clear first element
          LDIR                   ;  Now clear next 17 elements
          POP      HL            ;  *
          POP      DE            ;  *  Restore Registers
          POP      BC            ;  *
          RET                    ;  Exit
```

SUBROUTINE GINT

```
;  This subroutine gets a signed 16 bit integer
;  from the TRS8Ø Keyboard.
;  If a bad number istyped it returns with the
;  Status flag - non zero.
;  The 2's complement number is returned in HL

GINT    PUSH    BC          ;  *
        PUSH    DE          ;  *  Save Registers
        XOR     A           ;  Clear A and carry
        SBC     HL,HL       ;  Zero HL
        LD      B,5         ;  Maximum of 5 characters
        LD      (MIN),A     ;  Clear MIN=Minus Flag
GINT1   CALL    GCHRA       ;  Get a character and display
        CP      SPAC        ;  Is it a space?
        JR      Z,GINT1     ;  Yes then skip
        CP      NL          ;  Is it a newline?
        JP      Z,PRET1     ;  Done if new line, return ze
        CP      MINUS       ;  A minus number ?
        JR      NZ,POSON    ;  No then see if positive
        LD      A,1         ;  Set minus flag
        LD      (MIN),A     ;
        JR      GINT2       ;  Get rest of number
PCSON   CP      '+'         ;  Is number a positive number
        JR      NZ,NUM1     ;  See if numeric
GINT2   CALL    GCHRA       ;  Get next character
NUM1    CP      NL          ;  Newline?
        JR      Z,NUMET     ;  Yes then exit
        ADD     HL,HL       ;  Double number
        PUSH    HL          ;  Save X 2
        ADD     HL,HL       ;  X 4
        ADD     HL,HL       ;  X 8
        POP     DE          ;  Restore X 2
        ADD     HL,DE       ;  Now add to get X 1Ø
        CP      Ø           ;
        JR      C,ERRN2     ;  If number less than ASCII Ø
        CP      '9' + 1     ;  If number greater than ASCII
        JR      NC,ERRN2    ;  9 then error
        SUB     NUMBA       ;  Number input OK, so make int
        LD      E,A         ;  Binary and
        LD      D,Ø         ;  load into DE
        ADD     HL,DE       ;  Now add to total
        DJNZ    GINT2       ;  Do for next digit
        CALL    PNEWL       ;  Print a new line
NUMET   LD      A,(MIN)     ;  Is number negative?
        OR      A           ;
        JR      Z,PRET1     ;  No then finish off
        LD      A,L         ;  else complement
        CPL                 ;  The value in HL
        LD      L,A         ;
        LD      A,H         ;  (2's Complement)
```

```
                CPL                     ;
                LD      H,A             ;
                INC     HL              ;
PRET1           XOR     A               ;  Clear A and flags
PRET2           POP     DE              ;  *  Restore Registers
                POP     BC              ;  *
                RET                     ;  and return
ERRN2           CALL    PNEWL           ;  Print a newline
                LD      A,1             ;  Set A to 1
                OR      A               ;  Clear carry flag
                SBC     HL,HL           ;  Clear HL
                OR      A               ;  Clear carry flag
                JR      PRET2           ;  Return with ERROR CODE
```

```
SUBROUTINE POSDS

;  This routine displays the POSAR array for the
;  user to see how far the arm is from its
;  "Home position"


POSDS     PUSH    AF          ;  *
          PUSH    BC          ;  *
          PUSH    DE          ;  *  Save all registers
          PUSH    HL          ;  *
          LD      HL,POSST    ;  Print "RELPOS="
          CALL    PSTR        ;  String
          LD      B,6         ;  Motor count into B
          LD      DE,POSAR    ;  Point to array containing offs
NPOSA     LD      A,(DE)      ;  Get lower order byte into
          LD      L,A         ;  L
          INC     DE          ;  Increment memory pointer
          LD      A,(DE)      ;  Get higher order byte into
          LD      H,A         ;  H
          INC     DE          ;  Increment to next number
          LD      IX,NUMAR    ;  IX points to result string
          CALL    CBTAS       ;  Convert HL and leave in (IX)
          LD      HL,NUMAR    ;  Point to result string
          CALL    PSTR        ;  Print it
          CALL    PSPAC       ;  Print a space
          DJNZ    NPOSA       ;  Do for next motor
          CALL    PNEWL       ;  Print a new line, all done
          POP     HL          ;  *
          POP     DE          ;  *
          POP     BC          ;  *  Restore all Registers
          POP     AF          ;  *
          RET                 ;  Now return
```

SUBROUTINE PCSIC

```
;  PCSIC increments the signed 2's complement 16 bit
;  motor step offset counts.  It does not check for overflow,
;  but this is very unlikely.  The base would need to
;  be rotated about 32Ø times to cause such an event.

PCSIC   PUSH   AF          ;  *
        PUSH   BC          ;  *
        PUSH   DE          ;  *  Save registers
        PUSH   HL          ;  *
        LD     B,6         ;  B = motor count
        LD     DE,MOTBF+5  ;  Point to MOTBF
        LD     HL,POSAR+1Ø ;  Point to POSAR (relative position)
NPOS1   PUSH   BC          ;  Save motor count
        LD     C,(HL)      ;  Get lower POSAR byte in C
        INC    HL          ;  Point to Higher byte
        LD     B,(HL)      ;  Get higher byte in B
        LD     A,(DE)      ;  Get direction byte from MOTBF
        AND    3           ;  Clear all higher bits from D7-D3
        OR     A           ;  Is it zero?
        JR     NZ,NONZM    ;  No skip
        DEC    HL          ;  Yes then move POSAR pointer back
        JR     NPOS2       ;  and continue with next motor
NONZM   BIT    1,A         ;  Test direction bit
        JR     NZ,RDPOS    ;  Do for reverse direction
        INC    BC          ;  Advance element
        JR     STPOS       ;  Restore 16 bit POSAR element
RDPOS   DEC    BC          ;  Advance negative POSAR element
STPOS   LD     (HL),B      ;  Store higher byte
        DEC    HL          ;  Move pointer to lower byte
        LD     (HL),C      ;  Store lower byte
NPOS2   DEC    HL          ;  Back up POSAR pointer to
        DEC    HL          ;  next motor position slot
        DEC    DE          ;  Backup MOTBF pointer to next slot
        POP    BC          ;  Restore Motor count
        DJNZ   NPOS1       ;  Do next motor
        POP    HL          ;  *
        POP    DE          ;  *  Restore used Registers
        POP    BC          ;  *
        POP    AF          ;  *
        RET                ;  Done, Exit
```

SUBROUTINE STORE

```
;  STORE copies the TBUF array into the locations pointed to
;  by CUROW.  If the TBUF array is completely empty then the
;  copy is not done.  The COUNT and the CUROW variables
;  are both updated, and a check is made to ensure that
;  a store overflow is caught and the user told.

STORE   PUSH    BC          ;  *
        PUSH    HL          ;  *  Save registers
        LD      HL,TBUF     ;  Point to TBUF
        LD      B,6         ;  B = motor count
STEST   LD      A,(HL)      ;  Get TBUF (N)
        OR      A           ;  Is TBUF element zero
        JR      NZ,STOR1    ;  No then do store
        INC     HL          ;  Point to next element
        DJNZ    STEST       ;  Go do next element check
        JR      EXIT        ;  All TBUF zero so exit
STOR1   LD      (IX+Ø),Ø    ;  Clear DRBUF element
        LD      HL,(COUNT)  ;  Get current count value
        INC     HL          ;  Advance it
        LD      A,H         ;  See if over or at 512 bytes
        CP      1           ;
        JP      NC,OVRFW    ;  Yes then overflow
        LD      (COUNT),HL  ;  Put back advanced count
        LD      DE,(CUROW)  ;  Get current row pointer in DE
        LD      HL,TBUF     ;  Get TBUF pointer in HL
        LD      BC,ØØØ6     ;  Count for six motors
        LDIR                ;  Copy TBUF to ARST(1)
        LD      (CUROW),DE  ;  Replace updated row pointer C
        CALL    CTBUF       ;  Clear buffers
EXIT    POP     HL          ;  *
        POP     BC          ;  *  Restore Registers
        RET                 ;  Now return to caller
OVRFW   LD      HL,OVFMS    ;  Print overflow situation
        CALL    PSTR        ;  Message
        CALL    GCHRA       ;  Get response
        CALL    PNEWL       ;  Print a new line
        CP      'D'         ;  User typed a 'D'
        JP      Z,REDO      ;  Yes then clear all
        CP      'S'         ;  User typed an 'S'
        JR      Z,EXIT2     ;  Yes exit with sequence saved
        JR      OVRFW       ;  Bad input,  try again
REDO    CALL    INIT        ;  Clear all arrays etc
EXIT2   POP     HL          ;  *
        POP     BC          ;  *  Restore Registers
        POP     BC          ;  Throw away return address
        JP      QUES1       ;  Back to main loop
```

```
SUBROUTINE RESET

;  This subrcutine clears the POSAR array


RESET     PUSH    BC            ;  *
          PUSH    DE            ;  *  Save Registers
          PUSH    HL            ;  *
          LD      HL,POSAR      ;  Point to POSAR start
          LD      DE,POSAR+1    ;  Point to next element
          LD      (HL),ØØ       ;  Clear first POSAR element
          LD      BC,11         ;  Eleven more row counts to clear
          LDIR                  ;  Clear POSAR array
          LD      HL,STRST      ;  Print "ARM RESET" message
          CALL    PSTR          ;  and
          POP     HL            ;  *
          POP     DE            ;  *  Restore Registers and
          POP     BC            ;  *
          RET                   ;  Return to caller
```

```
;  PUTCHR prints a character in A

PUTCHR          PUSH    AF      ;  Save AF
                PUSH    DE      ;  Save DE
                CALL    PCHR    ;  Print character in A
                POP     DE      ;  Restcre DE
                POP     AF      ;  Restore AF
                RET             ;  Done, Exit
```

Don't type this

```
;  PSTR prints a string pointed to by HL

PSTR            PUSH    BC      ;  *  Save registers that are
                PUSH    DE      ;  *  corrupted by the TRS8Ø
                CALL    PUTSTR  ;  Print the string
                POP     DE      ;  *  Restore Registers
                POP     BC      ;
                RET             ;  Done, Exit

:  PSPAC prints a space character

PSPAC           PUSH    AF      ;  Save AF
                LD      A,2Ø    ;  A = Space character
                CALL    PUTCHR  ;  Print it
                POP     AF      ;  Restcre AF
                RET             ;  Done, Exit

;  PNEWL prints a new line to the screen

PNEWL           PUSH    AF      ;  Save AF
                LD      A,ØDH   ;  A = Newline character
                CALL    PUTCHR  ;  Print it
                POP     AF      ;  Restore AF
                RET             ;  Done, Exit

:  SCKBD  Scans the keyboard once and returns, non
;  zero if character found

SCKBD           PUSH    DE      ;  Save DE
                CALL    KBD     ;  See if character is there
                POP     DE      ;  Restore
                RET             ;  Done, Exit

;  GCHRA gets a character from keyboard and displays it

GCHRA           CALL    GCHR    ;  Get a character
                CALL    PUTCHR  ;  Print it
                RET             ;  Done, Exit
```

Don't type this.

CLEAR SCREEN ROUTINE

```
;     Simple scrolling type screen clear

CLRSC       PUSH    BC      ;  Save used register
            LD      B,16    ;  Get screen row count
UP1RW       CALL    PNEWL   ;  Print a new line
            DJNZ    UP1RW   ;  Do 16 times
            POP     BC      ;  Restore Register
            RET             ;  Exit
```

DELAY ROUTINES

```
                                    ;  Delay for 1Ø * E + 1Ø M cy
DELSW       PUSH    BC              ;  Save BC
DELS1       PUSH    BC              ;  Delay for 11 T state
            NOP                     ;  4 T state delay
            NOP                     ;  4 T state delay
            POP     BC              ;  Delay for 11 T states
            DJNZ    DELS1           ;  Do delay times value in B
            POP     BC              ;  Restcre BC
            RET                     ;  Exit
DELS        PUSH    BC              ;  Save BC
            LD      B,2Ø            ;  Set B for Ø.ØØ1 sec delay
            CALL    DELSW           ;  Do delay
            POP     BC              ;  Restore EC
            RET                     ;  Exit
DELT        PUSH    BC              ;  Save BC
            LD      E,Ø             ;  Set B for Ø.Ø1 sec delay (a
            CALL    DELSW           ;  Dc delay
            POP     BC              ;  Restore BC
            RET                     ;  Exit
DELLN       PUSH    EC              ;  Save BC
            LD      B,2ØØ           ;  Set B for 1.Ø sec delay (ap
DDDD        CALL    DELSW           ;  Do delay
            DJNZ    DDDD            ;  Do next delay section
            POP     BC              ;  Restore BC
            RET                     ;  Exit
```

A

P

P

L

I

C

A

T

I

O

N

S

FULL STEPPING AND HALF STEPPING THE MOTORS

Two tables are shown below, the first indicates the sequence for full stepping the motors and the second table shows the pulse pattern for half stepping the motors.

FULL STEPPING SEQUENCE

	QA	QB	QC	QD		STEP	
A	1	Ø	1	Ø	A	1	10
9	1	Ø	Ø	1	9	2	9
5	Ø	1	Ø	1	5	3	5
6	Ø	1	1	Ø	6	4	6

HALF STEPPING PULSE SEQUENCE

QA	QB	QC	QD	STEP	
1	Ø	1	Ø	1	10
1	Ø	Ø	Ø	1.5	8
1	Ø	Ø	1	2	9
Ø	Ø	Ø	1	2.5	1
Ø	1	Ø	1	3.Ø	5
Ø	1	Ø	Ø	3.5	4
Ø	1	1	Ø	4	6
Ø	Ø	1	Ø	4.5	2

The documental program contains a table FTABL which is shown below. This table contains the step sequence for full stepping also shown below is the new table FTABLH which contains the sequence for half stepping. To use this table (FTABLH) in the program it will be necessary to alter a few lines of code in the DRAMT routine. The comparison with 5 CPI 5 should be changed to a comparison with 9 and the program line LD A,4 should be changed to LD A,8. The table FTABL should now be changed so it appears as FTABLH

FULL STEP TABLE

				Step number
FTABL	DEFB	192	ØCØH	1
	DEFB	144	9ØH	2
	DEFB	48	3ØH	3
	DEFB	96	6ØH	4

HALF STEP TABLE

				Step number
FTABLH	DEFB	192	CØH	1
	DEFB	128	8ØH	1.5
	DEFB	144	9ØH	2
	DEFB	16	1ØH	2.5
	DEFB	48	3ØH	3
	DEFB	32	2ØH	3.5
	DEFB	96	6ØH	4
	DEFB	64	4ØH	4.5

If you compare the table values with the tables on the previous page you will note a difference, this is because QB and QC are exchanged in the above table due to the hardware switching these two lines.

NOTE

REMEMBER WHEN WRITING PROGRAMS DIRECTLY DRIVE THE ARM SO THAT THE QB AND QC OUTPUT BITS SHOULD BE REVERSED, SO THAT THE TOP FOUR BITS ARE:-

D8 = QA
D7 = QC
D6 = QB
D5 = QD

CONSTRUCTION OF A SUITABLE PORT FOR THE ARMDROID

A circuit diagram is given which describes in particular the construction of an 8 bit bi-directional, non latched port. T circuit as given is for the TRS8Ø bus, but it should be possible with reasonably simple modifications to alter it for most Z8O type systems.

The circuit described is a non latched port so the output data will appear for only a short period on the 8 data lines.

As can be seen from the diagram, the circuit draws its 5 volt power supply from the arm's interface port, and not from the processor it is connected to. The port was constructed this way due to the fact that some commercial microprocessor syste do not have a 5v output supply.

When the above circuit is connected to the arm's interface ca the bottom bit is usually pulled high, thus if the user input from the port at any time the data presented will mirror the state of the reed switches.

To output data to the arm using this port the user should sen the data to the port with the bottom bit cleared. The data will then be latched through to the addressed arm motor latch

The components for the described port should be easily available from most sources.

TRS80 8 BIT INTERFACE (NON LATCHED BI-DIRECTIONAL)

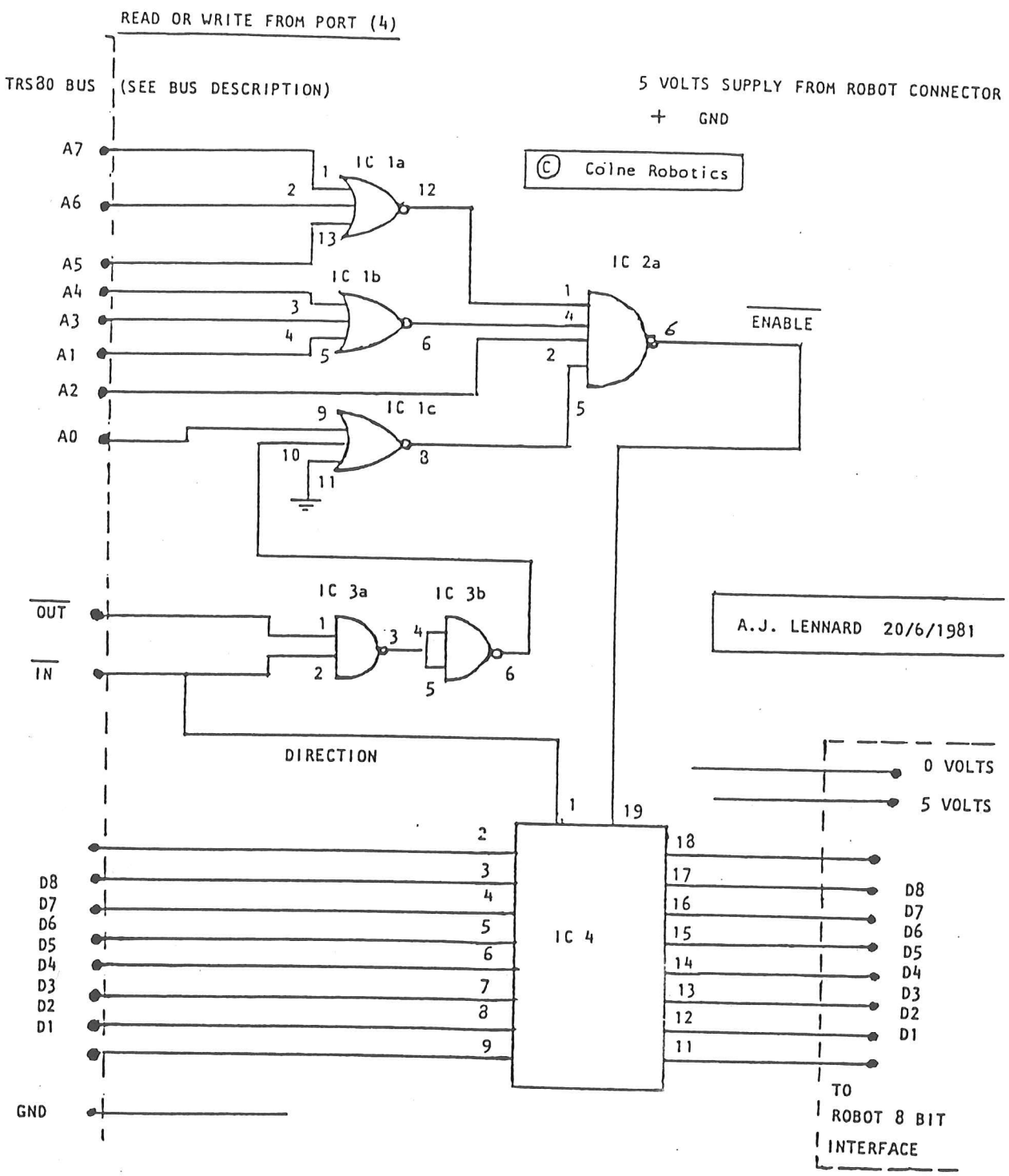

IC 1:	74LS27	Pin 14: 5 Volts, Pin 7: GND	.52	3*3 INPUT NOR
IC 2:	74LS20	Pin 14: 5 Volts, Pin 7: GND	.74	2*4 INPUT NAND
IC 3:	74LS00	Pin 14: 5 Volts, Pin 7: GND		4*2 INPUT NAND
IC 4:	74LS245	Pin 20: 5 Volts, Pin 10: GND	2.85	OCTAL BUS TRANSCEIVER (Tri-state)

CONNECTION OF ARMDROID TO PET/VIC COMPUTERS

PET/VIC USER PORT CONNECTOR

PIN NO	PET/VIC NOTATION	ARMDROID NOTATION
C	PA0	D1
D	PA1	D2
E	PA2	D3
F	PA3	D4
H	PA4	D5
J	PA5	D6
K	PA6	D7
L	PA7	D8
N	GROUND	GROUND

I/O Register Addresses (User Ports)

VIA Data Direction Control: 37138

PET Data Directional Control Register: 59459

VIC I/O Register Address: 37136

PET Data Register Address: 59471

The data direction registers in the VIA define which bits on the respective user ports are input and which are to be used as output bits. A binary one in any bit position defines an an output bit position and a zero defines that bit as an input bit.

SIMPLE BASIC ARM DRIVER FOR VIA (PET/VIC)

```
  5 L  =  37136:  Q = 37138
 10 PRINT "VIC ARMDROID TEST"
 20 PRINT
 30 PRINT "HALF STEP VALUES"
 40 T = 8: C = 2: S = 10: M = 1: I = 1: A$ = "F"
 50 FOR I = 1 TO T:  READ W(I):  PRINT W(I):  NEXT I
 60 POKE Q, 255
 70 INPUT "MOTOR NUMBER (1-6)"; M
 80 IF M<1 OR M>8 THEN 70
 90 INPUT "FORWARD BACKWARD"; A$
100 IF A$ = "F" THEN D = 0:  GOTO 130
110 IF A$ = "B" THEN D = 1:  GOTO 130
120 GOTO 90
130 INPUT "STEPS"; S
140 IF S<1 THEN 130
150 O = M + M +1
160 FOR Y = 1 TO S*C
170 F = W(I) + O
180 POKE L,F
190 POKE L,F-1
200 IF D = 0 THEN 230
210 I = I + 1:  IF I>T THEN I = 1
220 GOTO 240
230 I = I - 1:  IF I<1 THEN I = T
240 NEXT Y
250 GOTO 70
260 DATA 192, 128, 144, 16, 48, 32, 96, 64
```

TRS 80
Parallel out
= 14312

THE VALVES FOR L AND Q FOR THE PET ARE

Q = 59459 = DATA DIRECTION
L = 59471 = I/O

MOTOR STEP RELATIONSHIP PER DEGREE INCREMENT

Below are shown the calculations for each joint to enable the user to calculate the per motor step relationship to actual degree of movement.

These constants will necessary for users wishing to formulate a cartesian frame reference system or a joint related angle reference system.

Base

Motor step angle x ratio 1 x ratio 2

$7.5^{\circ} \times \frac{20 \text{ teeth}}{72 \text{ teeth}} \times \frac{12 \text{ teeth}}{108 \text{ teeth}}$ 32.4

4.040114009 x 10^{-3} Radian/step

= Ø.2314 degree step or 4.32152 steps per degree.

.231481481 4.320000001

Shoulder

$7.5 \times \frac{14 \text{ teeth}}{72 \text{ teeth}} \times \frac{12 \text{ teeth}}{108 \text{ teeth}}$ 46.3

2.828079806 x 10^{-3} Radian/step

= Ø.162 degree per step or 6.17284 steps per degree

.162037037 6.171428572

Elbow

Same as shoulder joint

Wrists

Same as base joint calculations

Hand

$7.5 \times \frac{2Ø \text{ teeth}}{72 \text{ teeth}} \times \frac{12 \text{ teeth}}{108 \text{ teeth}}$ 4.040114009 x 10^{-3} Radian/step

= Ø.231 degree per step

.231481481

$\frac{\pi \times d \times .231}{360}$ = (Ø.Ø524/2)mm

.052521482

=Ø.Ø262mm = hand pulley motion per step

.026260741

Total hand open to close pulley movement = 2Ø.Ømm

Angle traversed by single finger = $5Ø^{\circ}$

$\frac{5Ø^{\circ}}{2Ø.Ø \text{ mm}} \times Ø.Ø262\text{mm}$

= Ø.Ø655° per step or 15.2672 step per degree

.065651825

π = 3.1415926

d = 26mm = pulley diameter

SOME EXTRA POINTS TO BEAR IN MIND

a) Long Lead of LED goes to NEGATIVE
Short lead of LED goes via 4.7 kohm Resistor to POSITIVE

b) Due to LED hole being slightly too large a grommot will first have to be fitted to the LED and its holder can then be super glued if necessary into the grommot.

c) The Torque available is largely a function of speed and hence the user can expect performance to deteriorate as speed is incresed. Tables are supplied earlier in the manual.

FINAL NOTE

BEST WISHES AND GOOD LUCK

J. Reeks

THE ARMDROID 1 ROBOTIC ARM

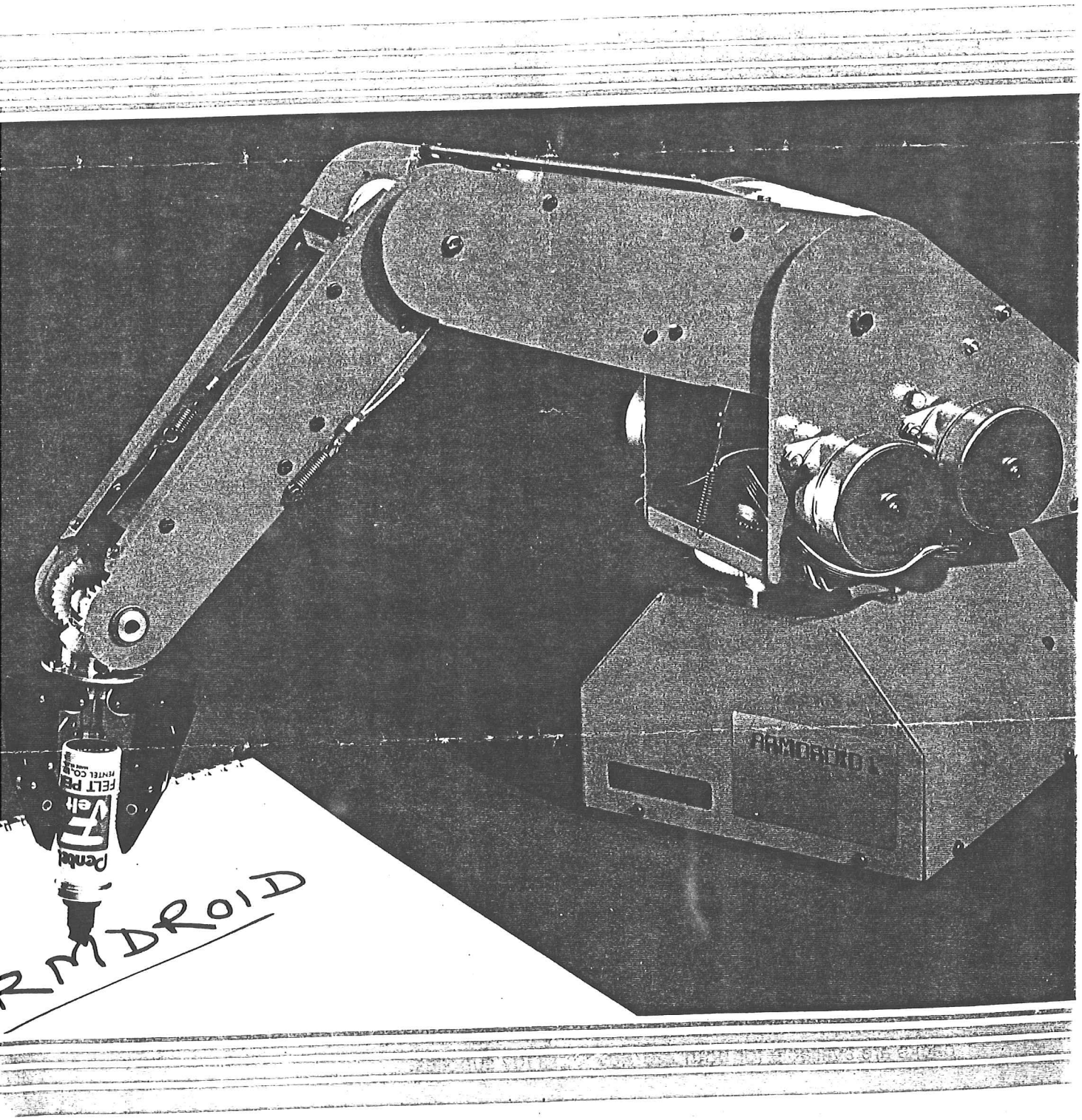

COLNE ROBOTICS CO. LTD.

BEAUFORT ROAD, off RICHMOND ROAD, TWICKENHAM TW1 2PQ, ENGLAND

Telephone: 01-892 8197/8241

Telex: 8814066

CP 324d

CHRISTCHURCH POLYTECHNIC

DIRECTORATE TEAM MEMO

TO: Bob Gilling
FROM: John Hercus
SUBJECT: POWER SUPPLY : ARMDROID
DATE: 18/7/83

FOR YOUR
URGENT ACTION
ACTION
INFORMATION ONLY
HANDBOOK

Please proceed to construct a power supply as you suggest.

If you need an order number, this could be obtained from Gay and charge it to 310 183.

October 21 1983

The Manager
Colne Robotics Ltd
Beaufort Road
East Twickenham
Middlesex TW1 4LL
ENGLAND.

Dear Sir,

Thank you for the cassette which arrived safely last term. We had by then typed in the text from the manual so that cassette was useful to check this for accuracy.

There were a number of errors in the text as given in the manual. These were mainly missing labels, misspelt labels and most of these I picked up by inspection and trial assembly. Others were picked up by operating the program under monitor control. May I suggest that for future editions of the manual that you simply lump the source code from your editor-assembler, preferably an assembled dump, rather than the manually typed version.

However, there are two major areas where there are problems with the program.

(1) The WRITE/READ modules do not store the value of COUNT. As this is set to zero by INIT, when the stored sequence is read in, COUNT is at zero. If the sequence is then added to, the CUROW pointer (which gets its value from COUNT) points to the first row, and the fresh data is written over the existing data. I modified WRITE and READ accordingly.

(2) This is the most serious of the two. The EDIT module, when in the ROW COUNT mode, does not update CUROW (next row pointer) after the array has been truncated. The consequence is that it still points to the same place. The following code was placed before JP QUESI just prior to EDMOT to cure this.

```
ADD     HL, HL          ; double the count
PUSH    HL              ; save it
ADD     HL, HL          ; Count * 4
POP     BC              ; Restore Count * 2
ADD     HL, BC          ; Count * 6
LD      B, ARST         ; Get buffer pointer
ADD     HL, BC          ; Calc. new CUROW
LD      (CUROW), HL     ; and save it
(JP     QUESI)
```

I hope this will be of some value to you.

Yours faithfully,

R. N. GILLING,

Tutor
Machine Tool Engineering Department.

June 10 1983

The Manager
Colne Robotics Ltd
1 Station Road
Twickenham
Middlesex TW1 4LL
ENGLAND.

Dear Sir,

Reference my letter 13 April 1983.

If you refer to paragraph 2 of the above letter you will see that I regarded the non supply of the cassette of software of prime importance.

Please will you send this URGENTLY, by the fastest available means.

It is also important to indicate on the package that this was part of a consignment not sent and that the cost has already been met.

We have typed in the listing in the manual, but this has many errors and we have had problems due to this and need to cross check our code.

Yours faithfully,

R N GILLING,

Tutor
Machine Tool Engineering Department,

Christchurch Polytechnic
PO Box 22-095
Christchurch
New Zealand

1 August 1983

The Manager
Colne Robotics Ltd
Beaufort Road
Twickenham
Middlesex TW1 2PH
England

Dear Sir

Ref: Your letter dated 27 July 1983

Our computer is a Model 1 TRS-80 with 48 K memory on board. Unfortunately this information was not given, so it appears in the original order.

Yours faithfully

R N Gilling
Tutor
Department of Machine Tool Engineering

RNG:CMD

COLNE ROBOTICS CO. LTD.

BEAUFORT ROAD, OFF RICHMOND ROAD,
EAST TWICKENHAM, MIDDX TW1 2PH
TELEX 8814066 TEL 01 892 8197 OR 8241

Mr. R.N. Gilling,
Tutor, Machines Tool Eng Dept.
Christchurch Polytechnic,
Madras Street,
Christchurch 1,
New Zealand.

27th July 1983

Dear Mr. Gilling,

Ref: Your Letter dated 10th June 1983

Please accept our apologies for not despatching the cassette, unfortunately we cannot until we know which computer you have. As soon as I have this information I can forward the cassette, providing it works on the computer you have, which I will confirm with our technicans. If there are any problems I will contact you.

Yours sincerely,
for Colne Robotics Co. Ltd.

Mrs. E. Viner
Sales Administration

REGISTERED OFFICE: BEAUFORT ROAD, TWICKENHAM, MIDDLESEX
REG. NO: 1558867
DIRECTORS: J. REEKIE, A.F.I. MACMILLAN, J.M.P. WATSON

COLNE ROBOTICS CO. LTD.

BEAUFORT ROAD, OFF RICHMOND ROAD,
EAST TWICKENHAM, MIDDX TW1 2PH
TELEX 8814066 TEL 01 892 8197 OR 8241

25 April 1983

R N Gilling
Tutor, Machines Tool Eng Dept
Christchurch Polytechnic
Madras Street
Christchurch 1
New Zealand

Dear Mr Gilling

We hope that our enclosures will ensure that you are soon able to achieve full operation from your Armdroid and that you will gain the same satisfaction that many other owners now have.

We are also enclosing some literature about other products which we are developing and hope that these may be of interest.

You are the first Armdroid owner in New Zealand and we hope that there will be many more in due course. We wonder whether you could suggest to us any Companies in New Zealand who might be interested in acting as agents and distributors for our products?

Your assistance in this matter would be greatly appreciated.

Yours sincerely

A. F. I. Macmillan

A F I Macmillan
Director and General Manager

COLNE ROBOTICS CO. LTD.

BEAUFORT ROAD, OFF RICHMOND ROAD,
EAST TWICKENHAM, MIDDX TW1 2PH
TELEX 8814066 TEL 01 892 8197 OR 8241

25 April 1983

R N Gilling
Tutor, Machines Tool Eng Dept
Christchurch Polytechnic
Madras Street
Christchurch 1
New Zealand

Dear Mr Gilling

Thank you for your letter of 13 April, I'm afraid that our instruction manual is not as up to date in some respect as we would hope, so I will reply to the questions you ask.

The omission

a) 6mm long x 8mm dia bore spacer
b) 3mm long x 8mm dia bore spacer

You will have received nine 1 mm steel washers which we now use in place of the spacers (six for the 6mm spacer and three for the 3mm spacer).

c) The magnets for the reed switch switcher are now only supplied with the reed switch kit.

The items observed by your technician

a) The belts. If the belts appear to be tight, check you have the pulleys the right way round, the pulley with the alloy extension should operate the wrist gears. The motors can be moved a little on their mountings to enable a small amount of belt adjustment. They should not be to tight as this puts extra load on the motors.

b) This is an omission in the manual

c) A useful point which will add to the new manual.

d) This could have been avoided by stringing the wrist drive with the spring on the inside.

25 April 1983

R N Gilling

e) The metal bar on the hand gear (part 25) acts as a stop against the composite gear spindle (part 21) to prevent the hand from opening to far, when adjusting the hand string tension make sure the stop is hard against the spindle with the hand open.

I hope the above answers help you to get full use out of your Armdroid, and if I can be of any other assistance do not hesitate to get in touch with me.

Yours sincerely

D Boothroyd
for Colne Robotics Co Ltd

COLNE ROBOTICS CO. LTD.

BEAUFORT ROAD, OFF RICHMOND ROAD,
EAST TWICKENHAM, MIDDX TW1 2PH
TELEX 8814066 TEL 01 892 8197 OR 8241

25 April 1983

R N Gilling
Tutor, Machines Tool Eng Dept
Christchurch Polytechnic
Madras Street
Christchurch 1
New Zealand

Dear Mr Gilling

We hope that our enclosures will ensure that you are soon able to achieve full operation from your Armdroid and that you will gain the same satisfaction that many other owners now have.

We are also enclosing some literature about other products which we are developing and hope that these may be of interest.

You are the first Armdroid owner in New Zealand and we hope that there will be many more in due course. We wonder whether you could suggest to us any Companies in New Zealand who might be interested in acting as agents and distributors for our products?

Your assistance in this matter would be greatly appreciated.

Yours sincerely

A. F. I. Macmillan

A F I Macmillan
Director and General Manager

REGISTERED OFFICE: BEAUFORT ROAD, TWICKENHAM, MIDDLESEX
REG. NO: 1558867
DIRECTORS: J. REEKIE, A.F.I. MACMILLAN, J.M.P. WATSON

April 13 1983

The Manager
Colne Robotics Ltd
1 Station Road
Twickenham
Middlesex TW1 4LL
ENGLAND.

Dear Sir,

The ARMDROID robot arm ordered by us on 27 September 1982 arrived on 31 March 1983. One of our technicians has assembled the kit, while I have the responsibility to get the arm working under software control.

The most notable omission was of the cassette of software (containing, I presume, the LEARN program). Would you please send this out by airmail as we need this to check out that the finished arm and associated electronics are working correctly.

Other less obvious omissions were:-

(a) 6mm long x 8mm dia. bore spacer.

(b) 3mm long x 8mm dia. bore spacer.

These go on shaft Pt No 29.

(c) The magnets to work the reed switches. Although not specifically ordered, these appear in the parts list.

The following items were observed by the technician while assembling the arm and the electronics:-

(a) Four out of the six belts seemed to be of incorrect length.

(b) The circuit diagram for the interface board did not match the printed circuit board in several areas.

(c) In the instructions it would be useful to indicate that the wires are to be soldered to the motors before fixing the motors in place.

(d) He found it nedessary to make spacers to hold the pulleys on the elbow pivot from moving against the sides of the arm.

(e) One of the gears (either Pt 24, 25 or 26) has a small metal bar attached to one face. This protrudes beyond the periphery of the gear, but was not shown as such in any of the pages of the manual. He is not sure that where he has placed this gear is correct. Could you inform us as to the function of this bar and which position the gear should be in?

Apart from these problems, the arm appears to be satisfactory and we look forward to making good use of it.

Yours faithfully,

R N GILLING,
Tutor, Machine Tool Engineering Department.

COLNE ROBOTICS CO. LTD.

INAUGURAL NEWSLETTER SPRING 1983

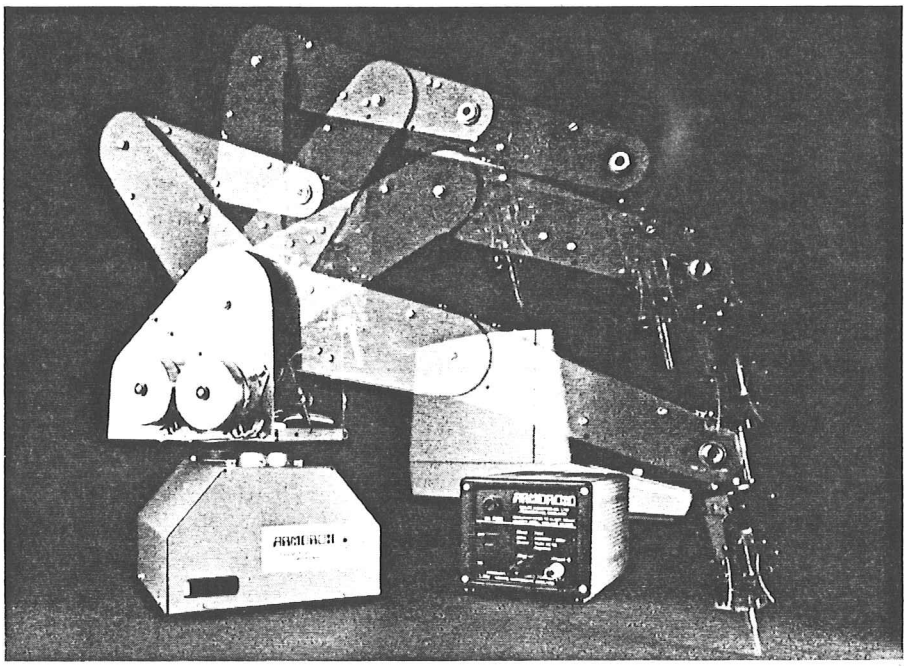

The Armdroid army is now 1000 strong . . .

CHAIRMAN'S LETTER

Since the launch of Armdroid I in September 1981, Colne Robotics has been the focus of considerable customer interest. We are now ready to introduce to our customers, new products which will further establish Colne's place as a leader in the field of micro-robotics.

In 1983 the company intends to increase the competitive attraction of Armdroid I, by making available a low-cost computer vision system. This is designed to meet the growing world interest in computer vision, but at very low cost. Coupled to the Armdroid this will familiarize students, managers and development engineers with the software requirements for visual recognition, orientation and robotic interfacing.

Other developments, such as Armdroid II, a small Turtle-type mobile robot, and X-Y plotters – all at low cost – will follow throughout '83 to ensure that the company remains in the forefront of micro-robotic technology. Please read on for further details of these exciting new developments.

Many thanks to all our customers for their support and patience.

J. Reekie.

John Reekie
Chairman

Beaufort Road, off Richmond Road,
East Twickenham, Middx. TW1 2PH
Tel: 01-892 8197 or 8241 Telex: 8814066

ARMDROID I achieves worldwide sales in first twelve months

Colne Robotics' low-cost robotic arm, the Armdroid I, has achieved outstanding sales success since its introduction in 1981. Among our customers have been a variety of schools, colleges and universities, as well as many leading world companies. The primary intention of buyers has been to use the arm for education and training in robotics as well as for the development of software. However, Armdroid I has also been put to such varied uses as radio-active loading, clean-room packing, and the dipping of components into dangerous liquids. In quite a different setting, the arm has been used to help the disabled.

Armdroid I's success against competitors worldwide is due to its mechancial reliability, the wide range of software now available, and of course to its markedly lower cost. Overwhelmed by orders, Colne Robotics was initially unable to meet the demand for Armdroid I. Our move to a new factory, coupled with recent backing by Prutec (a subsidiary of Prudential Corporation Ltd.) has enabled us largely to overcome delivery lags.

A subsidiary company, Colne Robotics Inc. in Florida, is starting production of Armdroid I early in 1983, to supply the large U.S. market. This has included major companies such as Bell Telephones and I.B.M., as well as educational establishments – Princeton, M.I.T. and many leading U.S. colleges. We fully anticipate that U.S. sales will reflect as strong an interest as that shown by our customers on this side of the Atlantic.

THE LOW-COST ARMDROID II – a 7-axis, applications micro-robot with 4lb lift

Buyers of our small Armdroid I micro-robotic arm have developed many different applications for the robot. Its general use in laboratories is outlined above. However, Colne Robotics has frequently received enquiries from customers for a faster and more accurate robot, capable of lifting heavier loads.

To meet this demand we are developing Armdroid II, which we believe will surpass the performance of any other small robotic arm in the world. In line with the low cost of Armdroid I, the new robot will be available remarkably cheaply, at less than £1,500.

The outline specifications of this new and improved Armdroid are as follows:

MECHANICAL SPECIFICATION

Load capacity	2 Kg	Stepping motors with gear reduction
Arm length to wrist pivot	600 mm	Effort transmitted up arm by H.T.D. toothed belts
Spherical envelope with STD gripper	1340 mm	

AXIS	MOTOR	ANGULAR MOVEMENT	ANGULAR SPEED
1	2	3	4
Base	70 Ncm*	I 270	180/ sec
Shoulder	70 Ncm	I 130	135/ sec
Elbow	70 Ncm	I 140	180/ sec
Wrist yaw	40 Ncm	I 180	180/ sec
Wrist pitch	40 Ncm	I 135	220/ sec
Wrist roll	40 Ncm	I 200	250/ sec
Gripper	40 Ncm	Designed to suit application	

Accuracy of repetition ± .5 mm (theoretical)

*1 Ncm = Torque exerted by 1 Newton Force at 1cm radius

ELECTRONIC SPECIFICATION

On board microprocessor	(Z80)	Ability to communicate with other computers
Key pad. Led display		Closed loop
On board EPROM learning program		

Launch is planned for Summer 1983. Please let us have your name and address, and we will be happy to keep you informed of developments.

COLVIS – Colne develops world's first low-cost computer vision system

"Intelligence" depends on the ability to acquire information about oneself and one's surroundings. So think of the benefits to be gained from enabling a computer or a robot to perceive such information for itself. Clearly, sensors have an important role to play in robotics engineering and, with this in mind, Colne Robotics has developed a revolutionary new computer vision system, which permits a computer to see objects and remember their shapes. Previous vision systems have been in the £20,000 – £40,000 price range, but the Colne Robotics system, COLVIS, will be priced at only £395.

It consists of a solid-state camera connected to a powerful micro-computer capable of extracting and learning information from the image produced. This information, such as area, perimeter and centre of gravity of the image, is used to recognise the object in view as well as to deduce its position and orientation. The system can be used in conjunction with any micro-computer which has, or can be fitted with, an 8-bit, parallel bi-directional port.

As with our existing Armdroid I micro-robotic arm, the vision system is aimed at the educational market. A versatile teaching-aid, equally at home in the University department or the classroom, it is also appropriate to the teaching carried out in Technical Colleges and by Industrial Training and Development Organisations.

This new product constitutes an invaluable low-cost peripheral to existing robotic arms which we expect to interest all our present customers, and attract many new ones.

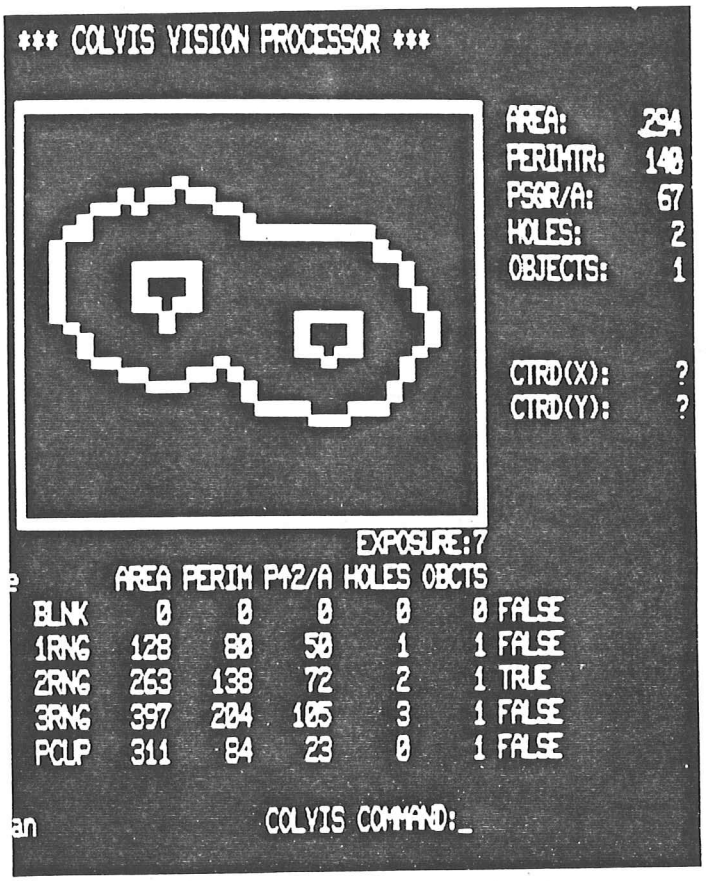

Here is the V.D.U. display after COLVIS has learnt 5 objects. It is seeking an object described by the selected parameters in the top R.H. corner and represented by the picture within the square. The first object examined (coded BLNK) was identified as false, as were the 2nd, 4th and 5th objects. The third object, 2RNG, was recognised as true by the similarity of its parameters to those selected.

GOLDMANN PERIMETER AUTOMATED CONTROL – Colne Robotics expands into the medical field

For many years the standard equipment for clinically testing the peripheral vision of the eye, has been the Goldmann perimeter device. In conjunction with the Institute of Ophthalmology, London, Colne Robotics has developed an additional unit which largely automates the testing procedure.

The unit consists of a microprocessor, an E.P.R.O.M. and a stepper motor to drive the mechanism. It substantially speeds up the process of testing a patient, gives predetermined testing programs and automatically re-tests areas of failed recognition.

The Colne Robotics unit has itself undergone exhaustive tests at Moorfields Eye Hospital, London. Priced at £495, a worldwide launch is scheduled for the unit in March 1983.